PHOTONICALLY ENABLED THZ COMMUNICATION LINKS

C.C. Renaud[1], K. Balakier[1], M. Fice[1], M. Natrella[1], L. Ponnampalam[1], H. Sham[1], A. J. Seeds[1], F. Van Dijk[2], M. Lamponi[2], G. Kervella[2], M. Chtioui[2]

[1]Dept of Electronic and Electrical Engineering, University College London, London, UK
[2]III-V Lab, a joint Laboratory of "Alcatel Lucent Bell Labs", "Thales Research & Technology" and "CEA-LETI", Palaiseau, France

Abstract

We present continuous-wave terahertz communication systems based on the optical heterodyne generation (photomixing) technique. The uni-travelling carrier photodiode is identified as a key component for conversion of optical to terahertz power. We discuss the potential for the overall system to transmit data at rates above 10 Gb/s and the limitations within the system. Finally we discuss the demonstration of photonic integrated chips for the emitter.

Introduction

For wireless transmission in buildings of higher data contents such as high definition TV, solutions will require broadband wireless access though the systems on current technology are limited in bandwidth. This issue can be addressed either using complex modulation formats or using higher carrier frequencies, reaching into the millimeter-wave (mm-wave) bands [1], that offers larger useable bandwidth [2]. An attractive solution to generate and detect signal at these frequencies is to use optical solutions as the high data rate modulations components already exist for the optical network. Further optical heterodyning techniques have been demonstrated to be the most flexible in terms of frequency, with commercial systems now available that cover from a few GHz up to 2 THz [3]. Such sources can now generate signals of the order of 100 µW up to 300 GHz carrier frequency.

Here we report our work on building communication systems based on heterodyne techniques for emission and detection and demonstrate coherent links up to 40 Gb/s with 16 QAM modulation. We also discuss the key issue of detection of the the transmitted signal and the alternative solution of using a uni-travelling carrier photodetector (UTC-PD) optically pumped mixer. Finally we present resent results on a monolithically integrated 120 GHz photonic transmitter.

Discussion

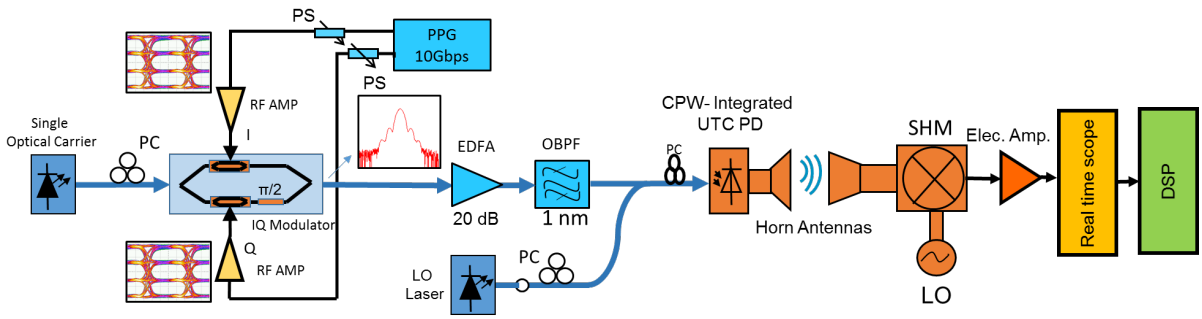

Figure 1: Transmission system for THz link at 40 Gb/s

The basic system is shown in figure 1, whereas the transmitter is based on two lasers heterodyned into a UTC-PD [4]. One of the laser is externally modulated with an IQ modulator to generate the quadrature amplitude modulation (16 QAM). The resulting heterodyne at the difference of frequencies of the two lasers (240 GHz) is carrying the modulation and transmitted through a 25 dB gain horn antenna. At the receiver end a Schottky diode mixer down converts the millimetre wave signal to an IF that is then received through a 80 Gs/s analogue to digital converter and then digitally processed to extract the data. In Figure 2, the data processing steps are shown with a signal transmitted across 10 cm. It is evident that the data has been recovered though there is a clear issue of noise on the edges of the constellation and despite having an error rate sufficient for a network including forward error correction. longer distances transmission was not possible. The main limitation of the system was the relatively low power emitted (-20 dBm) the low gain from the antenna, mostly due to the experimental arrangement available, and the relatively high conversion losses from the mixer (15 dB). The maximum power emitted from a UTC-PD at 240 GHz has been proven to be close to 0dBm [5], combined higher gain antennae (35 dB each), this would improve the maximum distance to 10 m. It is however evident that to increase the reach of such system then amplification at the transmitter, or array of photodetectors will be necessary to increase the transmitted power further. The availability of wide bandwidth low conversion loss mixers is also a limitation as it limits the overall SNR.

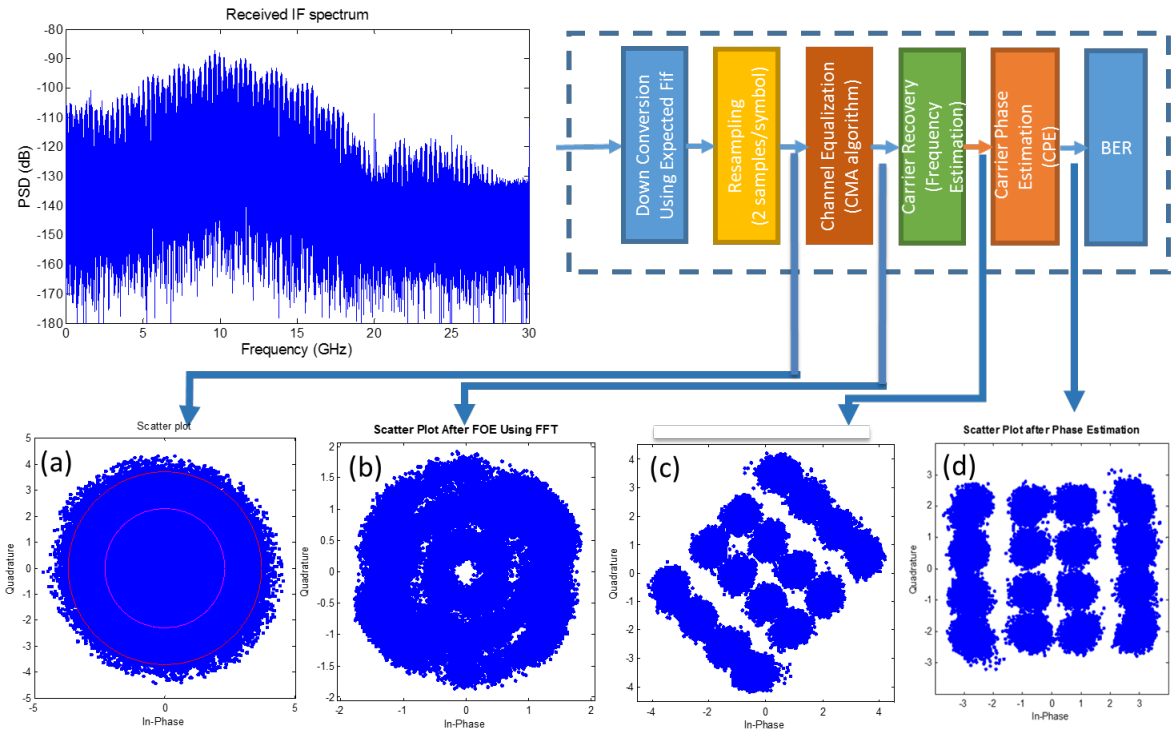

Figure 2: Link output and coding stage for 16 QAM signal

From the transmitter point of view there is encouraging developments in term of integrating the components on a single photonic chip. Recently a PIC including DFB lasers and UTC-PDs tuneable from 10 GHz to 120 GHz was demonstrated [6]. The PIC shown in Figure 3 was able to emit between -6 dBm and -14 dBm in the frequency range (figure 3). The PIC was used to transmit 100 Mb/s on-off keying modulation wirelessly at 120 GHz carrier. Most interestingly the PIC was using 400 mW (measured) of electrical power while the cooling system was using an estimated 600 mW. The modulation speed itself was limited to the back reflection interferences at the interface with the photodetector implying that despite the 10GHz bandwidth of the modulator higher modulation rate were not achievable. However a similar system with external modulation was used to achieve 1 Gb/s transmission at 105.4 GHz carrier [6].

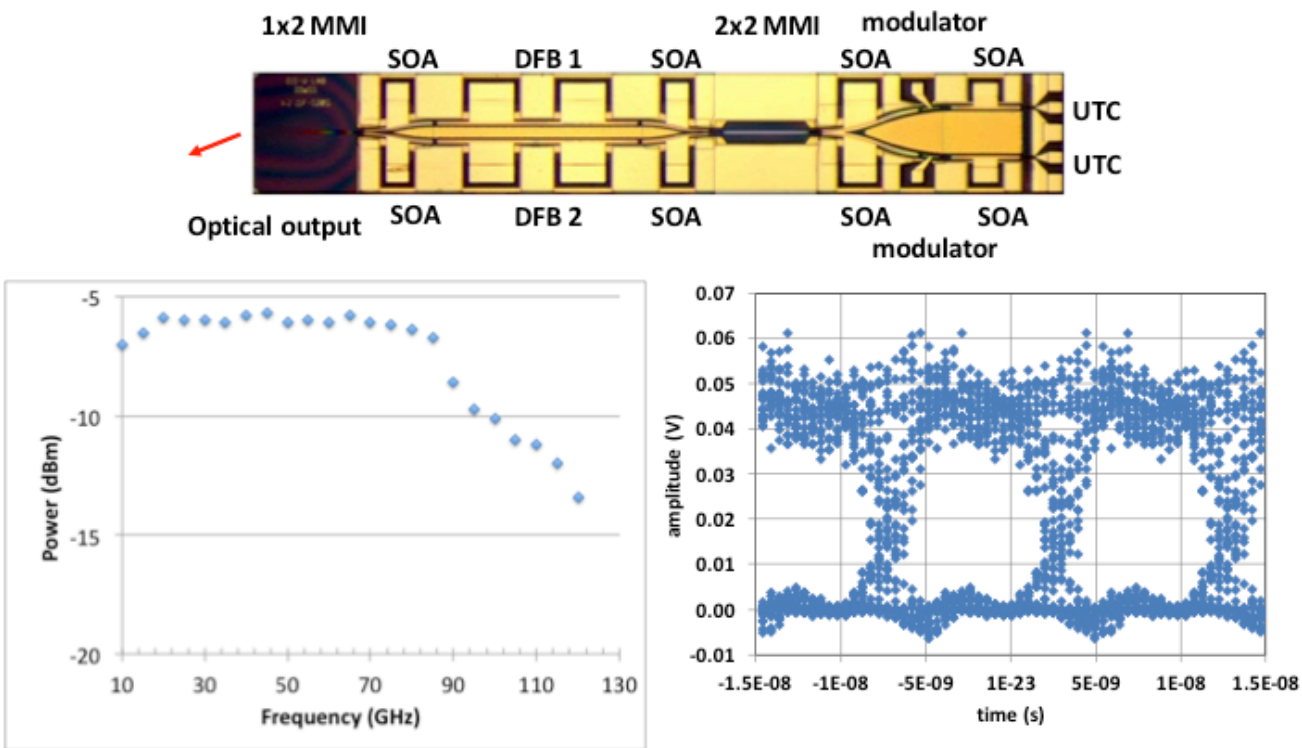

Figure 3: PIC for 120 GHz emission, with -10 dBm output at 100 GHz and transmission demonstration at 100 Mbit/s OOK.

Conclusion

We have shown that heterodyne techniques have great potential for high data rate short range wireless communication, with demonstration of up to 40 Gb/s transmission while over 100 Gbit/s are also possible. Such systems rely on optical communication components and advances in high speed photodetectors technology making them cost effective. Furthermore we demonstrated that a transmitter could be monolithically integrated, enhancing the potential for the technology to be mass-produced and offer relatively low power consumption. For the technology to reach its potential more work needs to be done on the receiver.

Acknowledgment

The authors would like to acknowledge the Engineering and Physical Science Research Council (EPSRC) for funding this work un the programme grant COTS, and the European Commission for their funding of the STREP iPHOS through the framework 7 ICT program.

References

[1] J. Federici and L. Moeller, "Review of terahertz and subterahertz wireless communications," J. Appl. Phys. 107(11), 111101 (2010).

[2] 'Millimeter Wave Propagation: Spectrum Management' Federal Communications Commission, Office of Engineering and Technology, Bull. 70 (1997).

[3] www.toptica.com/products/terahertz_generation.

[4] H. Ito, S. Kodama, Y. Muramoto, T. Furuta, T. Nagatsuma, and T. Ishibashi, "High-speed and high-output InP-InGaAs unitraveling-carrier photodiodes," IEEE J. Sel. Topics Quantum Electron., vol. 10, no 4, pp. 709–727, Jul./Aug. 2004.

[5] E. Rouvalis, C. C. Renaud, D. Moodie, M. J. Robertson, A. J. Seeds, "Continuous Wave Terahertz Generation from Ultra-Fast InP-based Photodiodes," IEEE transactions on Microwave Theory and Techniques, Vol. 60, pp. 509-517, 2012

[6] F. van Dijk, M. Lamponi, M. Chtioui, F. Lelarge, G. Kervella, E. Rouvalis, C. C. Renaud, M. J. Fice, G. Carpintero, "Heterodyne millimeter wave source with monolithically integrated UTC photodiodes," IEEE Topical meeting on Microwave Photonics, MWP 2013, Alexandria, Virginia USA, 2013