SKA Low Frequency Aperture Array Signal Processing

A. J .Faulkner[1], J. G. Bij de Vaate[2], K. Zarb-Adami[3]*

[1] University of Cambridge, Cavendish Laboratory, Cambridge CB3 0HE, UK. ajf@mrao.cam.ac.uk

[2]ASTRON, Oude Hoogeveensedijk 4, 7990 PD, Dwingeloo, The Netherlands, vaate@astron.nl

[3] University of Oxford, Denys Wilkinson building, Keble Road, Oxford, UK, kza@astro.ox.ac.uk

Abstract

Signal processing combined with communications technology are at the heart of all advanced radio telescope systems. Modern IT can provide the radical improvements in capability and performance that are driving the science capabilities of the current and planned instruments. At the forefront of improved performance are the "all-electronic" collector technologies, aperture arrays. In this paper we discuss the implementation of advanced signal processing technologies that are being used and take a worked example of the very large low-frequency phased array system being developed for the Square Kilometre Array. This shows opportunities for gaining great flexibility to the benefit of the science by using mainstream technology.

1. Introduction

Signal processing and communications are driving the latest generation of radio telescopes with major developments taking place for use on the Square Kilometre Array, SKA, the next generation low frequency radio telescope. The data rates and processing performance that can be achieved with currently available components means that concepts from the earlier days of radio astronomy, phased arrays, can be used at higher frequencies, larger bandwidths and higher numbers of beams. Indeed it has been argued that the use of dishes as a mechanical beamformer only gained strong acceptance to mitigate the processing load from phased array technology. The balance is changing and benefits in both performance and cost can be realised.

The Square Kilometre Array, SKA is the next generation low frequency radio telescope and is described on its website [1]. The work performed in the European funded FP6 programme, SKA Design Studies, SKADS, [2] showed that an implementation of the SKA using phased aperture arrays, AAs, operating from 50MHz up to 1.4GHz with a dish based array covering ~1.2GHz to 10GHz represents the most capable design for the agreed SKA Phase 2 science case [3].

The deployment of the SKA starts with a ~10% instrument, Phase 1, commencing construction in 2018. This includes a low frequency sparse AA covering 50MHz to at least 350MHz. The development of the more technically challenging mid-frequency AA system will continue in parallel, preparing for deployment in SKA Phase 2 commencing in the mid 2020's. This schedule enables SKA Phase 1 to benefit from the experience gained with current low frequency AAs, LOFAR [4] and MWA[6] systems, followed by the more difficult higher frequency AA in Phase 2.

2. SKA Low Frequency Aperture Array, LFAA

A very large phased array, the Low Frequency AA, LFAA, will be deployed in only a few years time. The LFAA, illustrated in Figure 1, covers the lowest frequency band for the SKA, from 50MHz up to 350MHz as described in the SKA Baseline Design or, as proposed up to ~650MHz. This is an aperture array consisting of 262,144 (2^{18}) wide bandwidth antennas. The configuration will be very close packed with 95% of the antennas within a 3km radius core and the remaining collecting area situated on three spiral arms, extending out to a radius of 45km to enable higher spatial resolution observations. The overall system is organized as logical stations constituting correlatable entities. The signal processing design is to support 1,024 stations of ~35m diameter. While the LFAA is a substantial system, with complexity deriving from its scale, there are no fundamentally new technologies required; the design relies only on the anticipation of higher performing signal processing devices at affordable costs, an expectation well justified by historical trends.

978-1-4673-5225-3/14/$31.00 ©2014 IEEE

Figure 1: SKA-low test array on the SKA site

3. LFAA Signal Processing Description

The LFAA signal flow is illustrated in Figure 2 showing two polarisations amplified and filtered locally at the antenna. Each polarisation is then transported via analogue fibre (RFoF) to a central processing "Bunker". The optical signal is then converted back to an electrical signal amplified and filtered prior to digitisation and digital signal processing. All the channelization and beamforming is performed in the digital domain. Physically, this implementation is shown in Figure 3, whereby all the 512k signals, with a maximum range of 45km, are processed in a single large facility. This provides great advantages for flexibility in configuration and, due to minimising the amount of remote electronics, great simplification and hence lower costs for maintenance during operation.

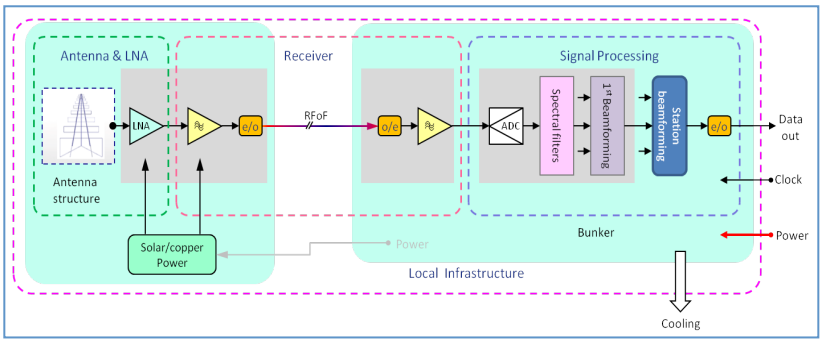

Figure 2: Signal flow for LFAA

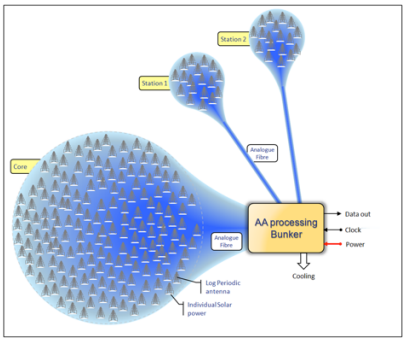

Figure 3: LFAA overall topology

The details of the antenna system are not considered here, the important feature for the signal chain is the use of low cost, low power RFoF to provide the massive signal transport for the LFAA. Use of simple analogue signals is critical for the minimization of radio frequency interference that would reduce the performance of the LFAA.

The full bandwidth analogue signal is presented at the processing bunker, and then bandpass filtered and fed to the ADC. The analogue receiver board and digital processing boards will be organized to process a complete "tile" of antennas of 16 x 2-polarisation channels. Control signals for the analogue processing system will be supplied by the tile processor e.g. selection of band and any required gain control signals.

LFAA is proposed to use two switchable filters: 50-375MHz and 375-650MHz, thus using the baseband and the 2nd Nyquist zone of the ADC sampling to provide separate, non-commensal low and high band operation. The signal processing requirement consists of two distinct parts: a first stage "tile" processing system and the station beamformer. The tile system is fed from the analogue receiver on a per-tile basis. The tile processing cards will handle 32 incoming channels, consisting of 16 dual polarization antennas. The role of the tile processors is to:

- Digitize the analogue signal using 8-bit high speed digitizers, which accommodate the likely RFI levels;
- Channelize the bandwidth into relatively narrow 1MHz channels to use phase shift controlled delays;
- Calibrate the signal as a function of frequency, to compensate for bandpass, gain and phase errors etc.;
- Apply beamformer weights; and
- Aggregate all 16-antenna signals into tile beams.

In the tile processor design shown in Figure 4, the input band is switched between 50-375MHz and 375-650MHz. The ADC converts either at baseband for the lower band or using the first alias for the higher band. To ensure that there is no discontinuity in LFAA frequency coverage, while there is no aliasing from the other band, the ADC sampling frequency is also switched: 800MS/s for the low band and 700MS/s for the high band.

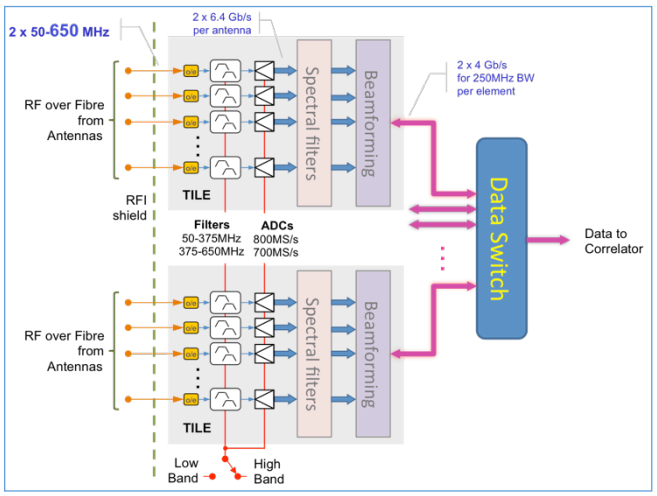

Figure 4: "Tile" processing for LFAA

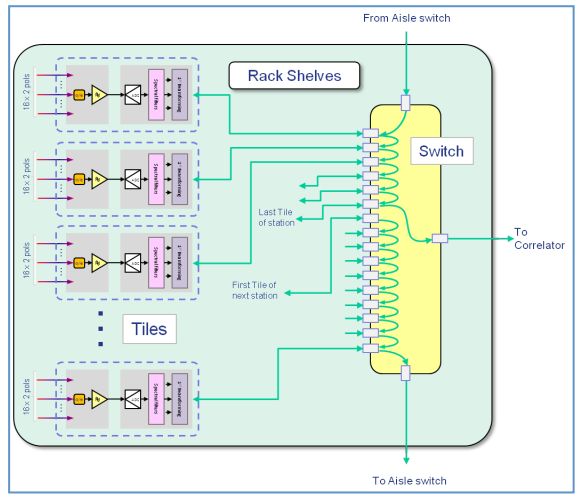

Figure 5: Station processing

The data outputs of the tile processors are accumulated for station beamforming. The function of the station beamformer is now very simple: it sums corresponding time & frequency samples from all the tiles used in the station, as the tile beamforming has provided all the phase alignment and gain adjustment required on the data streams within the packets. The structure is to "daisy chain" the tile processor outputs whereby each tile processor adds in the partial station beam to its own tile beam until the complete station of 16 to 64 tiles is accumulated and the "station beam" sent to the Correlator for further processing. Commercial data switches using standard data protocols e.g. Ethernet or Infiniband have the performance to steer and control the signal data used in the LFAA, this confers major benefits in that the control, monitoring and calibration data can also be communicated over the same data network, thus saving additional networks across the 16,384 tile processors required. By using switches for data steering improved tailoring of the system for performance and scientific benefit can be achieved e.g. alternative station sizes, overlapping stations to provide improved beam appodisation, multiple beams etc.

4. Processing system implementation

The practical implementation of the tile processor plus the bunker receiver card is illustrated in Figure 6. All the RFoF links come into the receiver board. The system is mounted in a 4U high shelf with a simple midplane linking to the digital processing cards. By using 4U high processing boards, then eight can be built into a 42U high rack with switches and power supplies. The main features of the design are:

- The overall construction is a double-sided rack with a central mid-plane board or connector system.
- All the analogue fibres connect to a "receiver board" which converts the optical signal to an electrical signal and provides analogue gain and any necessary equalization to compensate for any frequency dependence in the fibre link; Nyquist filtering and low end cut off prior to the ADC.
- A central mid-plane provides common services and the necessary physical sockets and interconnect to accommodate the receiver board and the tile processor, plus, the synchronization clock.
- The tile processor performs the digitization and beamforming functions for the tile. The analogue signals are taken to an array of 32 ADC channels that are directly linked into the FPGA(s) for processing. The beamformed signal is presented at a high-speed optical link for connecting to the LFAA processing network.

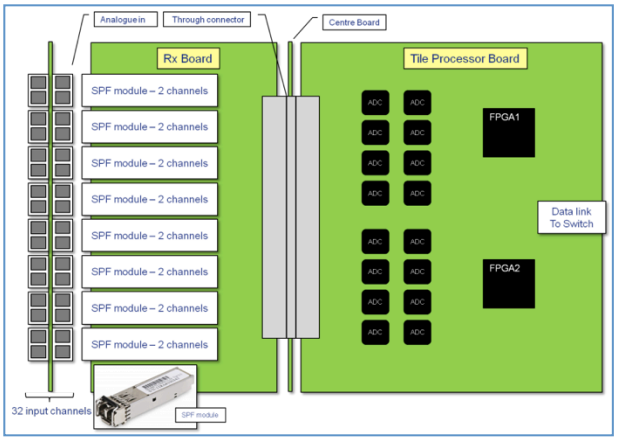

Figure 6: Receiver and tile processor boards

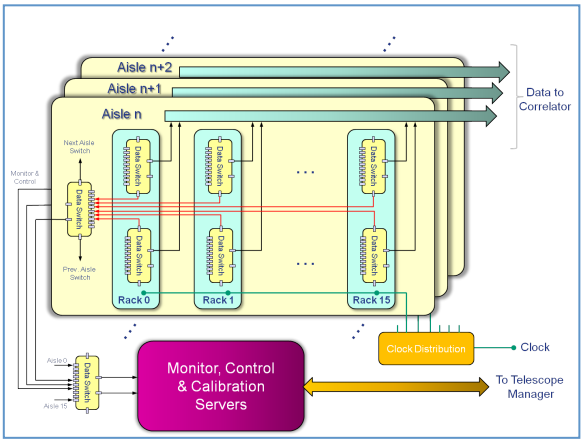

Figure 7: Overall processing interconnect

The data routing for the LFAA central processing facility is shown in Figure 7. It is assumed that the racks are organized as 16 aisles of 16 racks each. The station processing requirements are to enable flexible linking of adjacent tiles, so, each half rack of tile processors is connected via 36-port switch, all the half rack switches are linked to an aisle switch, which enables routing throughout the aisle. The aisle switches are "daisy chained to link to the nearest aisles. By organizing the antennas by location almost any configuration of stations should be feasible.

5. Conclusions

The development of the LFAA is a major part of the SKA, the key technology of RFoF at low cost and low power enables a system where all the digital processing is in a single bunker. This can be combined with other elements of the SKA-low telescope: correlator, system clock, management system and post processing system. This is an opportunity for a very cost effective and extremely flexible system where new processing approaches may be implemented and evaluated for performance. This system is an important stepping-stone on the path to the full, much larger SKA in the 2020's.

6. Acknowledgments

This paper is due to the work of many people on the low frequency aperture array element of the SKA project and continuing to do so as part of the Aperture Array Development Consortium. The author does not wish to list just a few participants, but to acknowledge the contributions made by everyone throughout these exciting developments.

7. References

1. *"The SKA telescope project"*, www.skatelescope.org.

2. *"Square Kilometre Array Design Studies, SKADS"*, www.skads-eu.org

3. A. J. Faulkner et al., *"SKA Memo 122: Aperture Arrays for the SKA - the SKADS White Paper"*, 2010

4. M. de Vos, A. W. Gunst, R. Nijboer, "The LOFAR Telescope: System Architecture and Signal Processing", *Proceedings of the IEEE, Vol. 97*, No. 8, August 2009

5. C. J. Lonsdale et.al., "The Murchison Widefield Array: Design Overview", *Proceedings of the IEEE*, Vol. 97, No. 8, August 2009