Comparison between Remote Antenna Units with Detachable Antennas and Photonic Active Integrated Antennas for Indoor Applications

Philippos Assimakopoulos[1], Vitawat Sittakul[2], Anthony Nkansah[1], Nathan Gomes[1], Martin Cryan[2] and David Wake[1]
[1]Broadband and Wireless Communications Group, University of Kent, Jennison Building, Canterbury, Kent CT2 7NT, UK. (pa80@kent.ac.uk)
[2]Department of Electrical and Electronic Engineering, University of Bristol, Merchant Venturers Building, Woodland Road, Bristol, BS8 1UB, UK. (m.cryan@bristol.ac.uk)

Abstract

Measurements are presented for the performance evaluation of two distinct low cost and low power Radio over Fiber (RoF) architectures for indoor applications. One is a low power consumption component based remote antenna system - with detachable antennas and the second is a system which features Photonic Active Integrated Antennas with lossless matching circuits.

1. Introduction

The distribution of broadband signals inside buildings suffers from high attenuation (absorption through walls) and high cost. A Distributed Antenna System (DAS) implemented through Radio over Fiber (RoF) can tackle the high attenuation problem and can also be a cost-effective approach. The use of low cost optoelectronic components in an architecture employing Multimode Fiber (MMF) can make use of the large installed base of MMF and offers an overall low-cost approach [1, 2]. Vertical Cavity Surface Emitting Lasers (VCSELs) together with PIN photodiodes (PDs) in a direct intensity modulation scheme provide the best option when cost and simplicity are the goals. Furthermore, the operational cost is reduced as the maintenance and logistic support are simplified since the complexity of the architecture is now concentrated in a single location, the Central Unit (CU), while the Remote Antenna Units (RAUs) are simplified. Another possibility is the use of Power over Fiber (PoF) techniques which can lead to further simplification of the RAUs in terms of logistic support [3]. A requirement for this approach is the low power consumption of the RAU components and the addition of a fiber to distribute the high intensity light for powering of the RAUs. Finally, work has been on-going for some time [4-6] to reduce costs still further by maximizing integration levels by using integrated antenna concepts that were explored in the mid-1990s in conventional electronic systems, these being termed Active Integrated Antennas [7]. Here optoelectronic devices are integrated with antennas, thus these are termed Photonic Active Integrated Antennas (PhAIAs). A number of system demonstrators have been previously assessed [4-6], however this paper presents the first independent assessment of their performance against a more conventional, less integrated approach.

2. System set-up

Two types of PhAIA based on lossless matching circuits are used here: active (termed active RAU1) and passive (termed passive RAU1). In the passive case a packaged VCSEL and PD are integrated via lossless matching circuits with low cost, planar microstrip antennas implemented on standard FR4 PCB [6]. This non-amplified approach gives the lowest possible DC power budget and has recently been used in a power-over-fiber based system as mentioned above [8]. The lack of amplification here limits the RF range and thus an amplified approach using low cost ERA-1 *Minicircuits*™ microwave amplifiers has also been developed [4, 5]. This gives better RF ranges, however, the system used here has not been optimized in terms of required amplification (it is straightforward to obtain higher gain devices) or crosstalk.

The low power consumption components based RAUs with detachable antennas (termed passive RAU2 and active RAU2) used here are the same as in [3] (albeit without amplifiers for the passive RAU2), but the high power laser used in [3] was not available during the experiments carried out. A power supply unit (PSU) was used to emulate the high powered laser and photo-voltaic converter (used in [3]) with an output voltage of 4V. The output of the PSU is regulated to +3.3 V and then converted to +2.2 V for the amplifiers in the RAU. The photodiode is supplied with -6.6 V bias by doubling and inverting the output of the voltage regulator. The amplifiers used in the RAU were low power consumption constructed from *Avago Technologies*™ ATF-55143 transistors. The power consumption of all the components in the active RAU2 of Fig.1 was 92mW with an efficiency of 82%.

978-1-4244-6051-9/11/$26.00 ©2011 IEEE

3. Measurement set-up

The measurement set-up section is divided into two main parts, one part for the throughput measurements and one part for the EVM measurements.

For the throughput experimental setup, the measurement was carried out at different locations inside a large office (see Fig. 1a) with wireless distances ranging from 3m to 10m. Each throughput measurement was recorded for one minute. The throughput results include measurements with the passive RAUs (802.11b only) and measurements with the active RAUs (802.11b and 802.11g). The measurements are carried out by fully loading the wireless channel with the transmission of a large file from the CU to the MU (downlink) and from the MU to the CU (uplink). For the 802.11g measurements, the Access Point (AP) was set to operate in 802.11g mode only. Fig. 1b shows the experimental setup for both categories. The experimental setup consists of three sections, CU, optical link and RAU. The CU and the RAU were isolated from each other by locating them in separate rooms. For the active experiments, both active RAU1 and active RAU2 had amplifiers as depicted in Fig. 1b, while for the passive experiments the amplifiers were omitted (passive RAU1 and passive RAU2). At the CU, a wireless Access Point (AP) manufactured by *3Com*^{TM} (model 8760) converts the downlink digital data from the host PC to an 802.11b/g signal. An RF circulator connected to the *3Com*^{TM} AP RF port separates and isolates the downlink and the uplink signals. An attenuator (AT1) is used to attenuate the +15dBm WLAN signal from the AP to 0 dBm for the active experiments (802.11b and g) and 9.5 dBm for the passive experiments (802.11b only), before intensity modulating the 850nm VCSEL (VCSEL1) from *ULM*^{TM}. The higher drive power for the 802.11b signal can be accommodated due to its lower (compared to 802.11g) Peak-to-Average Power Ratio (PAPR) which means that the signal is less prone to link nonlinearity. The modulated optical light exiting the VCSEL (VCSEL1) is transported to the RAU via the optical link. The optical link consists of a 325m length of MMF (3rd generation). At the RAU, a photodiode converts the optical signal back to an electrical RF signal. For the active experiments, an amplifier is used to amplify the RF signal before being emitted wirelessly to the MU (laptop) via an antenna with (active RAU1) and without (active RAU2) an impedance matching circuit. Throughput measurements were carried at the laptop using the *Networx*^{TM} software. All the RAUs used in the experiments have separate uplink and downlink antennas. In the uplink path, the MU (laptop) transmits the WLAN signal to the RAU under test. The antenna of the RAU converts the received wireless signal into an electrical signal. The electrical signal propagating from the antenna is then used to intensity modulate the VCSEL of the RAU under test. For active experiments, the signal from the antenna is amplified and fed to the VCSEL of the RAU under test. An optical link consisting of 325m length of MMF transports the intensity modulated light signal from the RAU to the CU terminated by a photodiode (PD1). The electrical signal exiting the photodiode (PD1) is guided to the *3Com*^{TM} AP via an isolator (ISO1) and a circulator.

For the EVM experiments, the setup is very similar to the throughput experiments mentioned earlier and is depicted in Fig. 1c. The only differences between the throughput and EVM experiments are at the CU and the MU. At the CU the AP is omitted and replaced with an *Agilent*^{TM} Vector Signal Generator (VSG) and an EVM measurement instrument for the downlink and uplink paths respectively. The EVM measurement instrument consists of an *Agilent*^{TM} PSA spectrum analyzer, with an omni directional antenna, connected to a laptop running EVM measurement software (VSA software). The VSG emulates the WLAN (802.11b/g) signal at an RF frequency of 2.45GHz. At the MU, the laptop is replaced with an EVM measurement instrument (MURx) and VGS with omni-directional antenna for the downlink and uplink paths respectively. Both EVM measurement instrument and the VSG at the MU perform the same functions as their counterparts at the CU.

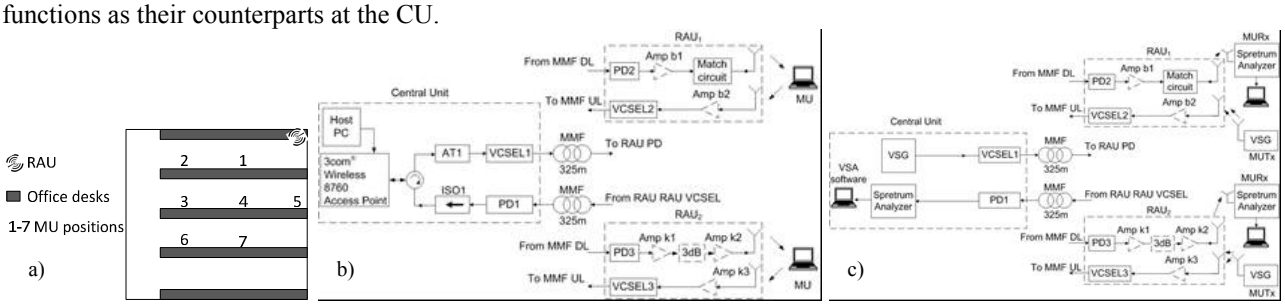

Fig. 1 a) RAU and MU locations in the measurement office (12x10m). b) Bidirectional throughput experimental setup for RAUs with Photonic Active Integrated Antennas (RAU1) and Optically Powered RAU with discrete components (RAU2). c) EVM downlink and uplink experimental setup for RAU1 and RAU2.

4. Measurement results

For the throughput measurement, some variations in throughput are observed due to the changing multipath conditions in the room. The maximum theoretical throughput is indicated by the red line in the following results. Results for 802.11b (Fig. 2) using the passive RAU1 and passive RAU2 are close to the theoretical maximum. In the uplink, there is a slight reduction for the passive RAU1. The passive RAU2 performance is similar in both uplink and downlink. For the active RAU1 and active RAU2, with 802.11b transmission (Fig. 3), the throughputs are higher and more stable due to the amplification (i.e. higher transmit and receive power) in uplink and downlink for both systems. With transmission of 802.11g (Fig. 4), the active RAU2 shows high achieved throughputs (>20Mbps) while the active RAU1 has significant lower throughput. These differences are consistent throughout the different positions for both uplink and downlink.

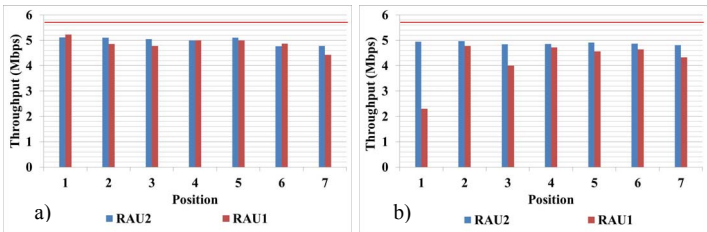

Fig. 2 Throughput results for passive 802.11b experiment a) downlink and b) uplink.

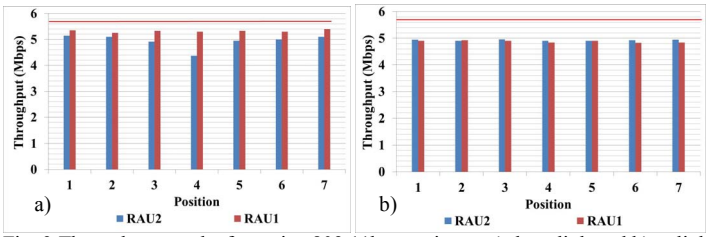

Fig. 3 Throughput results for active 802.11b experiment a) downlink and b) uplink.

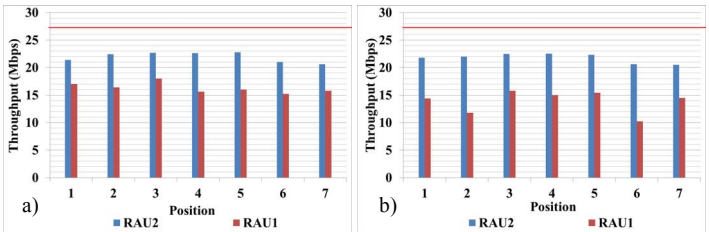

Fig. 4 Throughput results for active 802.11g experiment a) downlink and b) uplink.

For the EVM measurements, each EVM result is averaged following 100 EVM measurements in each position while each EVM measurement is averaged over 1000 symbols. The EVM is recorded at the relevant locations in the room (Fig. 1a) and as such, takes into account the wireless path. Therefore, the EVM Standard Deviation (EVM-SD) will also depend on the multipath conditions. In the following results, the EVM-SD is indicated in the form of error bars superimposed on the average EVM values. Although, multipath conditions will inevitably affect the EVM-SD, some trends can be observed. In the case of the passive RAU1 and passive RAU2, the EVM-SD is more or less the same for both systems (Fig. 5a). When the comparison moves to the active RAUs (Fig. 5b, Fig. 5c), it is evident that the active RAU1 shows significantly higher EVM-SD than the active RAU2 when transmitting both WiFi standards. This may be due to RF cross-talk that occurs due to the finite downlink and uplink path separation and due to radiated power emitted from the downlink antenna, being received by the uplink antenna. This effect is usually evident as a pulsation in the received EVM constellation observed during measurements.

In order to observe the stability of the two systems (in terms of EVM-SD), without the wireless channel multipath affecting the measurements, a different approach is followed. The MU and RAU distance is decreased considerably (10 cm) so that multipath effects are minimized. Table 1 summarizes the EVM and EVM-SD values for the two systems in the uplink direction. The MU transmit power was set to 10 dBm for the passive RAUs and to 0 dBm for the active RAUs. An additional measurement at 5 dBm was carried out for 802.11g. The EVM-SD for RAU1 is

higher by a factor of 2.4 and 1.4 for 802.11b passive and active topologies respectively and a factor of 5.4 and 9.7 for 802.11g at the two different powers. The EVM-SD is significantly lower than in the downlink case. This is because the uplink signals are received at a much higher power at the RAU.

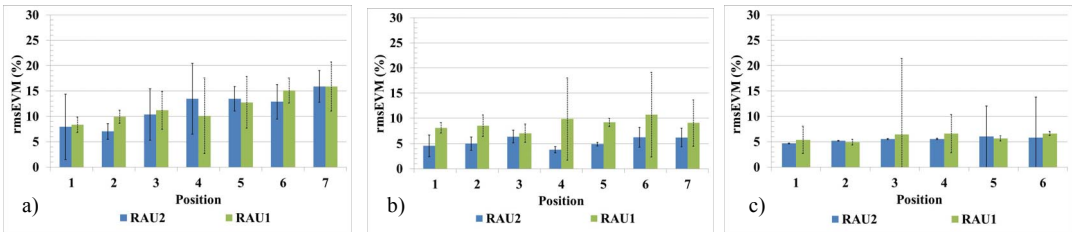

Fig. 5 EVM results for downlink a) 802.11b passive, b) 802.11b active and c) active 802.11g.

Table 1: EVM measurement results at MU-RAU distance of 10cm (uplink direction).

802.11/Tx power		b/10 dBm	b/0 dBm	g/0 dBm	g/ 5 dBm
Topology		Passive	Active	Active	Active
RAU1	EVM	5.17	5.74	3.56	3.68
	EVM-SD	0.68	0.41	0.89	0.95
RAU2	EVM	4.89	4.52	3.16	3.04
	EVM-SD	0.28	0.3	0.17	0.1

5. Conclusion

The two systems presented and compared here offer two valid options for indoor distribution of broadband signals. One is mainly aimed for use with detachable antennas and PoF capabilities which have been demonstrated and is also a discrete approach as there are no integrated components. The second system employs Photonic Active Integrated Antennas with lossless matching circuits and can also be employed in a PoF system. The two approaches however, lead to different performances. The integrated approach suffers from RF cross-talk issues which limit its performance considerably when distributing 802.11g signals. This limitation is evident in the low achievable throughputs as well as in a consistently high EVM standard deviation. The discrete approach on the other hand indicates very high throughputs (>20 Mbps) for 802.11g, up to a distance of 10m (at least). Both systems can offer extremely good performance in the distribution of 802.11b signals.

6. References

1. Cisco (2007), “Enabling Enterprise 10 Gigabit Ethernet Deployment with Long Reach Multimode Optics, white paper,”CiscoSyst.,USA.[Online].Available:http://www.cisco.com/en/US/prod/collateral/modules/ps5455/prod_white_paper0900aecd806b8bcb.pdf.

2. A. Das et al., “Design of low-cost multimode fiber-fed indoor wireless networks,” IEEE Trans. Microw. Theory Tech., vol. 54, no. 8, pp. 3426–3432, Aug. 2006.

3. D. Wake, A. Nkansah, N. J. Gomes, C. Lethien, C. Sion, and J-P. Vilcot, "Optically Powered Remote Units for Radio-Over-Fiber Systems," IEEE J. Lightw. Technol., vol. 25, no. 15, pp. 2484–2491, Aug. 2008

4. V.Sittakul and M.J.Cryan, “A Modular Wireless-over-Fibre (WoF) System using Photonic Active Integrated Antennas (PhAIAs)”, International Journal Of Microwave And Optical Technology, Vol.5, No.2, March 2010.

5. V.Sittakul and M.J.Cryan, “A 2.4-GHz Wireless-over-Fibre System Using Photonic Active Integrated Antennas (PhAIAs) and Lossless Matching Circuits”, IEEE Journal of Lightwave Technology, Vol. 27, No. 14, July 15, 2009, pp2734-2731.

6. V.Sittakul and M.J.Cryan, “A Fully Bi-directional 2.4-GHz WiFi System Using PhAIAs”, IEEE Journal of Lightwave Technology, November 2007 pp3358-3365.

7. M.J.Cryan, P.S.Hall, K.S.H.Tsang and J.Sha, “Integrated active antenna with full duplex operation”, IEEE Trans. Microwave Theory and Tech, Vol.45, No.10 October 1997, pp 1742-1748.

8. V.Sittakul, L.R.Clare, S.G.Burrow, X.C.Li and M.J.Cryan, "Power-over-Fibre for Wireless Applications", Microwave and Optical Technology Letters, to be published 2011.