Performance Analysis and Measurement Results of an Ultra-Low Power Wakeup Radio in the Presence of Interference

Nauman F. Kiyani, ***Yan Zhang***, ***Pieter Harpe***, ***Xiongchuan Huang***, and ***Guido Dolmans***
Holst Centre/IMEC-NL, High Tech Campus 31, Eindhoven, The Netherlands
Email(s): {nauman.farooq.kiyani, yan.zhang, pieter.harpe, xiongchuan.huang, guido.dolmans}@imec-nl.nl

Abstract

Wakeup radios (also referred to as event-driven radios) is a paradigm for low-cost, low-energy identification radios to assist the main radio for continuous channel monitoring without sacrificing the latency requirements. Wakeup radios show the potential to extend considerably the life-time of the main radios. In this paper, we present the design, and measurement results of an ultra low-power wakeup radio. The designed wakeup radio achieves excellent performance in terms of probability of miss-detection and probability of false alarm. The designed radio is also analyzed in the presence of co-channel continuous wave and modulated interferer in a wide variety of deployment scenarios. The performance is considerably better than other low-power implementations available in the market.

1 Introduction

Next generation wireless radios are expected to support a large array of functionalities coupled with a long talk or stand-by time. The combination of both, a large variety of functionalities and a small power consumption, thus requires the development of low-power, efficient communication techniques. Wakeup radio, also referred to as an event-driven radio, is such a solution which consumes much less power than the high performance main radio. The concept of wakeup radio has generated lots of interest recently, [1–3], and the references therein.

Wakeup radio, which acts as an event driven radio is able to target a broad range of applications, for instance, wireless sensor networks (WSN), remote control, active RFID, and wireless personal area networks (WPANs), to name a few. However, one of the major bottlenecks in the promised quality of service (QoS) is co-channel interference (CCI). In WPAN, for instance, most of the devices are targeting the industrial, scientific and medical (ISM) band of 2.4 GHz; as it is universally available. Some of the standards already operating on 2.4 GHz are: IEEE (802.15.1, 802.15.4, 802.11x) and ISO 18000-4. Thus, the issue of coexistence and CCI needs to be addressed in order to provide a minimum QoS.

In this paper, we extend on the results of [3], and present the performance analysis of wakeup radio in the presence of CCI. We analyze the performance of the wakeup radio in terms of probability of miss detection (P_{miss}) and probability of false alarm (P_{false}) in various deployment scenarios. Different interfering sources, for instance, modulated interference and continuous wave (CW) are considered.

The rest of the paper is organized as follows. In Section 2 wakeup radio's system model is presented. Followed by performance analysis and measurement results in Section 3. Finally, in Section 4, major conclusions of the paper are presented.

2 Wakeup Radio System Model

An envelope detector based receiver is a popular choice [1, 2] to realize the RF front-end of a wakeup receiver. The non-coherent demodulation leads to a very power efficient design [1,2]. The envelope detector, which can be mathematically represented as a squaring block, is a critical part of the design and has the most impact on the detection capability of the receiver. After the analog-to-digital converter (ADC) the digital data is sent to the digital baseband (DBB) for the detection of the address. For in-depth discussion on the DBB we refer the reader to [3], and the references therein. The information conveyed on the wakeup channel is structured into a packet. In our case, the wakeup packet carries an 8-bit address of the intended receiver and the address is Manchester encoded. There is also a possibility to carry payload of 20 bits for additional control information. The structure of the wakeup packet is given below:

978-1-4244-6051-9/11/$26.00 ©2011 IEEE

	Preamble	SFD	Address Code	Flag	Payload
Bits	8	8	16	1	20

Each wakeup radio contains a unique address code for identification. Different sequences can be used as the address code, for instance we employ, orthogonal variable spreading factor (OVSF) code and pseudo-noise (PN) code. Depending on the sequence characteristics, such as the auto- and cross-correlation, different P_{false} and P_{miss} is achievable.The local address is configurable with the serial peripheral interface (SPI).

3 Performance Analysis and Measurement

A binary information sequence may be transmitted using on-off keying (OOK). To transmit a 0, no signal is transmitted in the time interval of duration T_s; whereas to transmit a 1, a signal waveform $s_d(t)$ is transmitted. Non-coherent demodulation performance of OOK is very well studied in literature and we refer the reader to [4], and the references therein.

Interference: Limited spectral resources call for efficient use of the spectrum. However, in certain circumstances avoiding interference is simply not possible. Interference has a detrimental effect on the overall performance of the system. Interfering signals can be of many types, for instance, CCI occurs when the interfering signal overlaps with the desired signal in the frequency domain. Inter symbol interference (ISI), occurs due to the dispersive nature of the channel and causes the symbols to interfere with one another. In this paper, we confine ourselves to CCI interference and consider two types of interfering sources, i.e., single tone CW interferer and modulated interferer (specifically phase modulated interference). In both the cases the interference is additive in nature and overlaps the carrier in the frequency domain. Without the loss of generality, the signal received at the RF front end can be written as

$$y(t) = \sqrt{P_d}s_d(t) + \sqrt{P_i}s_i(t) + n(t), \tag{1}$$

where $s_d(t)$ and $s_i(t)$ are the desired and interfering signals normalized such that P_d and P_i represent their powers, respectively and $n(t)$ represents the additive white Gaussian noise (AWGN) with zero mean and variance $\sigma^2 = N_0/2$. The average interference-to-noise ratio is $\bar{\gamma}_i = P_i/\sigma^2$. The ratio of the carrier-to-interference ratio, thus, is $C/I = P_d/P_i$.
In order to understand the effect of different sources of interference we simplify (1) to an interference limited scenario, i.e., ignore the noise term. Let $m(t)$ represent the signal after the envelop detection which has been effected by a CW source (i.e., $s_i(t) = \cos(\omega_0 t)$). The spectrum of the signal (i.e., Fourier transform of the signal, defined for a function $g(t)$ as $G(w) = \frac{1}{\sqrt{2\pi}}\int_{-\infty}^{\infty} g(t)e^{j\omega t}\mathrm{d}t$) after the envelop detector can be written as:

$$\begin{aligned} M(\omega) &= \sqrt{\frac{\pi}{2}}\Big[A_d^2 S_d(\omega) + A_i^2\delta(\omega) + 2A_dA_iS_d(\omega) + \frac{A_d^2}{2}S_d(\omega-2\omega_0) + \frac{A_d^2}{2}\delta(\omega+2\omega_0) + A_dA_i \\ &\quad S_d(\omega-2\omega_0) + A_dA_iS_d(\omega+2\omega_0) + \frac{A_i^2}{2}\delta(\omega-2\omega_0) + \frac{A_i^2}{2}\delta(\omega+2\omega_0)\Big], \end{aligned} \tag{2}$$

where A_d and A_i represent the amplitude of the desired and the interfering signals, respectively. Passing the above signal (2), through a low pass filter will result in

$$M(\omega)_{\text{lowpass}} = \sqrt{\frac{\pi}{2}}\Big[A_d^2 S_d(\omega) + A_i^2\delta(\omega) + 2A_dA_iS_d(\omega)\Big]. \tag{3}$$

Now if we assume a modulated interferer with the relative information being stored in the phase, i.e., $s_i(t) = \cos(\omega_0 t + \phi)$ then the spectrum of the output of the envelope detector can be given as

$$\begin{aligned} M(\omega) &= \sqrt{\frac{\pi}{2}}\Big[A_d^2 S_d(\omega) + A_i^2\delta(\omega) + A_dA_ie^{-i\phi}S_d(\omega) + A_dA_ie^{i\phi}S_d(\omega) + \frac{A_d^2}{2}S_d(\omega-2\omega_0) + \frac{A_d^2}{2}S_d(\omega+2\omega_0) \\ &\quad + A_dA_ie^{-i\phi}S_d(\omega-2\omega_0) + A_dA_ie^{i\phi}S_d(\omega+2\omega_0) + A_i^2e^{-2i\phi}\delta(\omega-2\omega_0) + \frac{A_i^2}{2}e^{2i\phi}\delta(\omega+2\omega)\Big]. \end{aligned}$$

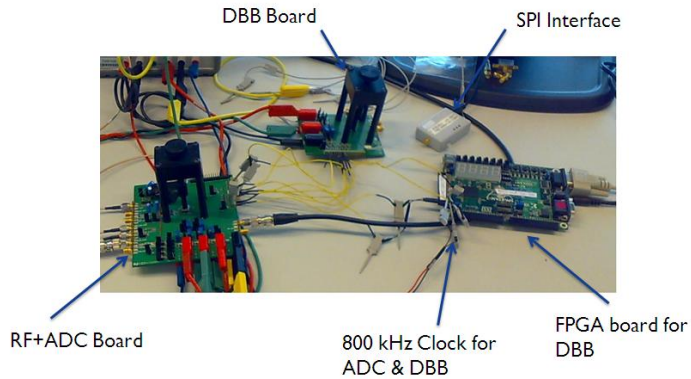

Figure 1: Measurement setup used to gauge the performance of Wakeup radio in the presence of interference.

Passing the above signal through a low pass filter will result in

$$M(\omega)_{\text{lowpass}} = \sqrt{\frac{\pi}{2}}\left[A_d^2 S_d(\omega) + A_i^2 \delta(\omega) + 2A_d A_i \cos(\phi) S_d(\omega)\right]. \quad (4)$$

In (4), the factor $\cos(\phi)$ attenuates the signal (except for the special case when $\phi = 0 \pm 2\pi k$ for integer k). There is no way to know the relative phase and hence $\cos(\phi)$ can assume any value within $[-1, 1]$. Therefore, by observing (3) and (4), respectively, we can note that the impact of the modulated interferer will be detrimental on the overall performance of the system.

Measurement Setup Figure 1 shows the measurement setup for the wakeup radio. It is a 2-chip 2-board solution. The first chip, the envelope detector [1] and 4-bit analog-to-digital converter, make up the analog front-end operating at 2.4GHz/915MHz; whereas, the DBB is implemented on the second chip. A Xilinx Spartan 3 FPGA board is adopted to provide clock, reset, and input data to the chip. As stated earlier, in the measurement we tested two kinds of codes, PN code and OVSF code. The address length employed is 8 bits, thus, 254 PN codes can be used as the address code (the all-one and all-zero sequences are not considered). The code distance between any two PN sequences can be as small as 1. In contrast, constructed by Hadamard matrices, OVSF codes are orthogonal to each other if the two codes have the same length. The limitation is that, the number of available OVSF codes is the same as the length of the addresses code, which makes OVSF codes only suitable for small scale networks.
In the entire measurement we assume the channel to be additive white Gaussian noise (AWGN) and the system is operated at a signal-to-noise ratio (SNR) of 12dB. The SNR value is chosen with a reference to a packet error rate (PER) of 1×10^{-3}.
Results and Discussion We present the results of the performance of wakeup radio in the presence of CCI and parse the results on basis of deployment scenarios. The focus is on observing the performance measured in terms of P_{miss} and P_{false}, which are a measure of PER.
Figure 2 shows the result when it is assumed that the wakeup radio is deployed in a network of other wakeup radios. All the wakeup radios in the considered network are OVSF coded, implying that the total network size is 8. Two interfering sources, i.e., CW and PSK modulated are considered, respectively. Figure 2 can be parsed into two major regions. The first region exists at the left of C/I ratio of 4dB at a $P_{miss} = 0.6$. To the left of this region, i.e., below C/I ratio of 4dB, almost no address is getting detected as also indicated by the large value of P_{miss}. So, in this region, P_{false} is not a good indicator to gauge overall system performance. The second region is on the right of C/I ratio of 4dB, where the P_{miss} tends to the value where the interference has a minimal effect and the performance is determined by the AWGN. This phenomenon occurs at a $C/I = 16$dB for an SNR = 12dB when the P_{miss} approaches 1×10^{-3}. Furthermore, it is important to note that the receiver shows excellent performance in terms of P_{false} if the address is OVSF coded in this region. In the presence a PSK modulated interfering source leads to a degradation of 4dB at $P_{miss} = 2 \times 10^{-2}$. This degradation occurs as shown in (4), due to the inter-modulation component that overlaps the desired signal with a relative phase of the interfering source included.
Figure 3, shows the results when the wakeup radio (OVSF coded) is deployed in a network of other wakeup

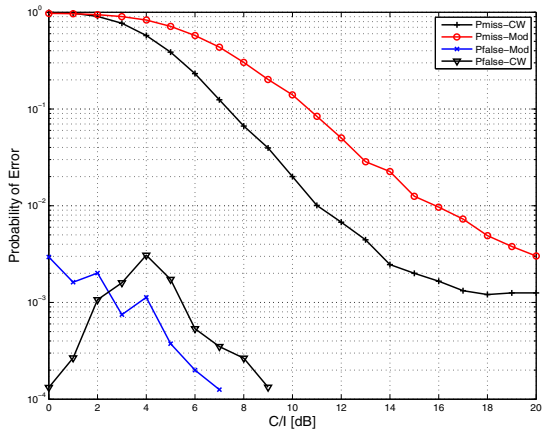

Figure 2: In a network where the desired and interfering addresses are OVSF coded. SNR = 12 dB and two interfering source considered are CW and PSK modulated.

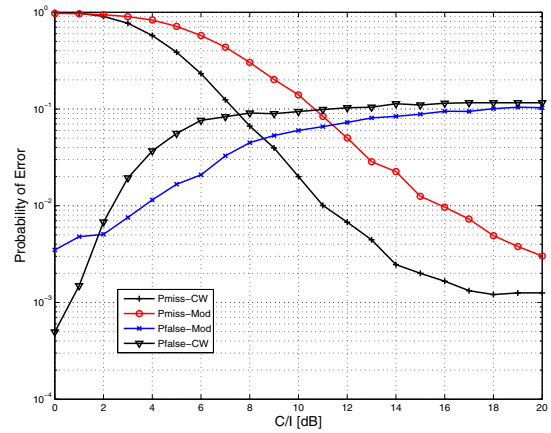

Figure 3: In a network where the interfering addresses are PN and wakeup radio under-consideration is OVSF coded. SNR = 12 dB and two interfering source considered are CW and PSK modulated.

radios which are PN coded. This implies that the network size is 254. The interfering sources as before are CW and PSK modulated. The only difference in performance from the above scenario is in the poor performance of P_{false} which shows that the protection against false alarm is poor in the presence of randomly generated addresses.

Comparison with other commercially available radio is not possible because of different measurement parameters. However, to get an indication of the performance we can look at the specifications as outlined by [5]. In [5], the CCI for a Bluetooth radio operating 3dB above sensitivity for a BER of $\leq 0.1\%$ is 11dB. In comparison to this our performance with PER indicators is considerably better, also note that we are not operating 3dB above the sensitivity level. It is important to reiterate, that it is only an indicator to the performance and not a direct comparison.

4 Conclusion

The measurement results show that an ultra low power wakeup radio is a practical solution for deployment in realistic scenarios which are limited by interference. In the presence of a CW interferer, the wakeup radio requires 16dB of C/I ratio at an SNR of 12dB with a $P_{miss} = 1 \times 10^{-3}$. Whereas in the presence of a PSK modulated interferer the entire performance degrades by 4dB in comparison to a CW interference source.

References

[1] X. Huang, S. Rampu, X. Wang, G. Dolmans, and H. de Groot, "A 2.4GHz/915MHz 51μW wake-up receiver with offset and noise suppression," *IEEE Solid-State Circuits Conference*, Feb. 2010.

[2] N. Pletcher, S. Gambini, and J. Rabaey, "A 2GHz 52μW wake-up receiver with -72dBm sensitivity using uncertain-if architecture," *IEEE Solid-State Circuits Conference*, Feb. 2008.

[3] Y. Zhang et al., "A 3.72μW ultra-low power digital baseband for wake-up radios," {*accepted*} *IEEE Symposium on VLSI Design Automation and Test*, Apr. 2011.

[4] A. Annamalai and V. Bhargava, "Asymptotic error-rate behavior for noncoherent on-off keying in the presence of fading," *IEEE Trans. Commun.*, Sept. 1999.

[5] "Specification volume 0: Specification of the Bluetooth system," Tech. Rep., Dec. 2009.