Millimeter-/Terahertz-Wave Measurements for Biological Materials Using Photonically Generated Continuous Waves

Hiroshi Ito [1,2] ***and Hiroshi Yamamoto*** [1]

[1]Center for Natural Sciences, Kitasato University,
[2]Graduate School of Medical Sciences, Kitasato University,
1-15-1 Kitasato, Minami-ku, Sagamihara, Kanagawa 252-0373, Japan
e-mail: h.ito@kitasato-u.ac.jp

Abstract

This paper describes two promising millimeter-/terahertz-wave measurement techniques suitable for biological substances. For the reflection-geometry imaging, a planar circulator circuit is developed and integrated into a photonic transceiver module operating in the J-band. The fabricated module is applied to *in-vivo* imaging of a human finger at 270 GHz. For obtaining more qualitative information, a photonic millimeter-wave ellipsometry system is developed for measuring the complex relative dielectric constant of the sample. It is successfully applied to *in-vivo* measurement of human skin in the F-band.

1. Introduction

Use of millimeter-/terahertz-waves for non-destructive measurement is promising for various applications, such as security inspections [1] and medical diagnosis [2]. These technologies are based on the feature of high-frequency electromagnetic waves, that is, they can propagate through various materials but are strongly absorbed/reflected by specific materials, such as ones that contain water and/or metals. Thus, for the applications to the biological substances, the measurement should be in the reflection-geometry. For realizing this, some key components are still to be developed. For example, in the reflection-geometry imaging, a circulator is an important component to establish a single signal-path system. This configuration can eliminate troublesome alignment between incident and reflected signals, and thus simplifies the measurement. However, availability of the conventional circulator consisting of a branched-waveguide and a small ferrite piece is limited for operations below 170 GHz [3].

Although the imaging is a promising technique, it can only provide signal contrast reflected from the sample. However, in some cases, we have to know the qualitative characteristics of the material for better understanding of the phenomena. Although the THz time-domain spectroscopy [4] is an effective way for this purpose, it requires expensive setups and is rather sensitive for the environmental change. Thus, we need easier, lower-cost, and effective measurement technique with which we can obtain more qualitative information of material property. A candidate for this is the millimeter-/terahertz-wave ellipsometry [5]. This technique measures the complex relative dielectric constant of the sample, and thus, we can further understand the phenomena in the sample.

In this paper, we describe two promising millimeter-/terahertz-wave measurement techniques for biological substances, that is, reflection geometry imaging and ellipsometry.

2. Photonic Generation of Continuous Millimeter-/Terahertz-Waves

For the efficient and relatively short turn-around-time measurement, use of continuous wave (CW) signal should be superior for its relatively high average power compared with the one that uses pulsed signal. In addition, the use of photonics technology provides several advantageous for practical applications. It can achieve a very wide bandwidth, reasonable output power, simple configuration, and relatively low-cost. The signal source is compact, light, and connected with a flexible cable so that the measuring head can be flexible for the movement, which is an important feature for the clinical diagnosis at the bedside. Thus, we employed the photomixing for generating millimeter-/terahertz-waves. The optical sinusoidal signal was generated by two-mode beating using two laser diodes having slightly different wavelengths at around 1.55 μm. Then it was converted to an electrical signal using a uni-traveling-carrier photodiode (UTC-PD) [6, 7], a unique photodiode having a wide bandwidth and high output power, simultaneously. It could generate output powers of more than 20 mW at 100 GHz [8], more than 0.5 mW at 350 GHz [9], and more than 10 μW at 1.04 THz [10].

978-1-4244-6051-9/11/$26.00 ©2011 IEEE

3. Reflection Geometry Millimeter-/Terahertz-Wave Imaging

For realizing a practical reflection-geometry imaging, we developed a planar circulator consisting of a microstrip-line (MSL) based 180-degree rat-race hybrid circuit (Fig. 1) fabricated on a quartz substrate [11]. It was designed for the operation at around 300 GHz. Then, it was integrated in a compact module with a UTC-PD and an InP-based Schottky barrier diode (SBD) to construct a photonic transceiver module [11]. Figure 2 shows a photograph of the fabricated module. Its size is $30 \times 12.7 \times 10$ mm^3 excluding bias electrode, signal connector, and an optical fiber. In this module, port 2 of the circulator was connected to an MSL based transformer that interfaces the circulator with a WR-3 rectangular waveguide. The signal from UTC-PD (port 1) only goes to port 2, and that from port 2 only goes to the SBD (port 3). This function prevents the interference between the input and output signals.

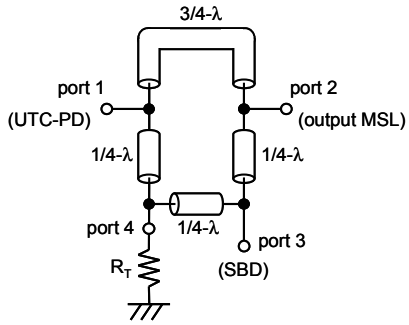

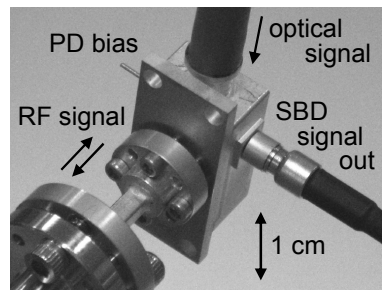

Fig. 1: Circuit diagram of fabricated planar circulator. Fig. 2: Photograph of fabricated transceiver module.

Figure 3 compares the frequency dependences of the sensitivity of the SBD in the transceiver module measured with the signal from the external PD module and that from the internal PD. The sensitivity of the internal SBD peaked at around 270 GHz when the signal was transmitted from the external PD module. On the other hand, when the signal was transmitted from the internal PD in the transceiver module, there was a sharp decrease in sensitivity at around 270 GHz. With considering the separately measured insertion losses between each port, the isolation of the circulator, which is defined as the ratio of the loss between port 1 and port 2 against the loss between port 1 and port 3, was estimated to be as high as about 14.3 dB at 270 GHz. These results clearly demonstrate that the fabricated circuit functioned properly as a circulator at around 270 GHz, and thus, the fabricated module functioned as a sub-THz transceiver. To our knowledge, this is the first demonstration of a photonic mm-wave transceiver module for CW signals at around 300 GHz.

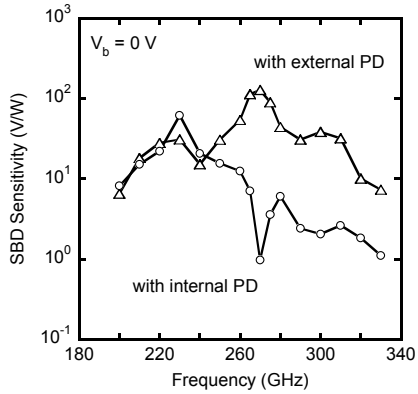

Fig. 3: Frequency dependencies of the sensitivity of the SBD in the transceiver module. Plotted data represent the result with the external PD module and that with the internal PD.

Using this module, a reflection geometry imaging was performed at around 270 GHz. Although the bandwidth of the circulator was rather narrow, practical signal-to-background ratio was obtained within a bandwidth of about 20 GHz. This indicates that the fabricated sub-THz transceiver module is applicable for the reflection-geometry imaging at around 300 GHz. Finally, the fabricated module was successfully applied to an *in-vivo* millimeter-wave imaging of a human finger at 270 GHz.

4. Millimeter-/Terahertz-Wave Ellipsometry

The ellipsometry is a widely used non-destructive measurement technique in the "light" region, and can also be applied to millimeter-/terahertz-wave range for revealing complex relative dielectric constant of the sample. Thus, we can obtain more qualitative information of the material compared with the imaging. We have developed a photonic millimeter-wave ellipsometry system shown in Fig. 4 [12]. Here, an F-band UTC-PD module [13] was used as the signal source. A linearly polarized incident signal was transmitted through a pyramidal horn antenna, and irradiated the sample with an angle of 45˚ against the plane of incidence. Then, an SBD with a pyramidal horn antenna was rotated for a span of 180 degrees or 360 degrees. Figure 5 shows an example of the measured signal intensity reflected from a human skin *in vivo*. Here, the incident signal frequency was 110 GHz and the incident angle (ϕ) was 55˚. As shown in Fig. 5, the signal intensity exhibits twofold symmetry. From these results, the complex relative dielectric constant was iteratively deduced using the Newton method. This process was repeated at different frequencies. Figures 6(a) and 6(b) show the frequency dependencies of the obtained complex relative dielectric constant of human skin in the F-band (90-140 GHz). The magnitudes of both parameters decrease as the frequency of the incident signal increases. The solid curves in the figures represent the relative dielectric constants calculated from the Debye model expressed as,

$$\varepsilon(\omega) = \varepsilon_\infty + \frac{\varepsilon_s - \varepsilon_\infty}{1 + i\omega\tau} \quad (1),$$

where ε_∞ is the high frequency relative dielectric constant, ε_s is the static relative dielectric constant, and τ is the relaxation time, respectively. As a value of τ, we used a relaxation time of water, 9.4×10^{-12} s [14]. From the least squares fitting, ε_∞ and ε_s were estimated to be 4.02 and 54.39, respectively. These fitting curves agree well with the experimental data, indicating that the dielectric relaxation of the human skin is basically described by the relaxation of orientational polarization. In addition, the fact that the time constant of the water can be used for explaining the behavior of the human skin implies that the material characteristics of the human skin is strongly affected by the nature of water. Such information can only be obtained by the method other than the imaging, so that the complimentary use of the imaging and the ellipsometry should be promising for analyzing the property of biological substances in the millimeter-/terahertz-wave range.

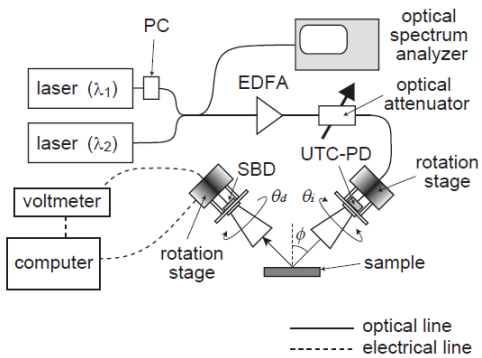

Fig. 4: Schematic diagram of the photonic millimeter-wave ellipsometry system.

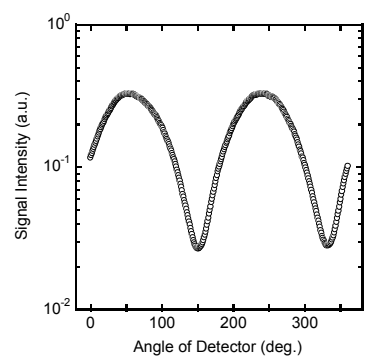

Fig. 5: Angle dependence of the reflected millimeter-wave intensity by human skin.

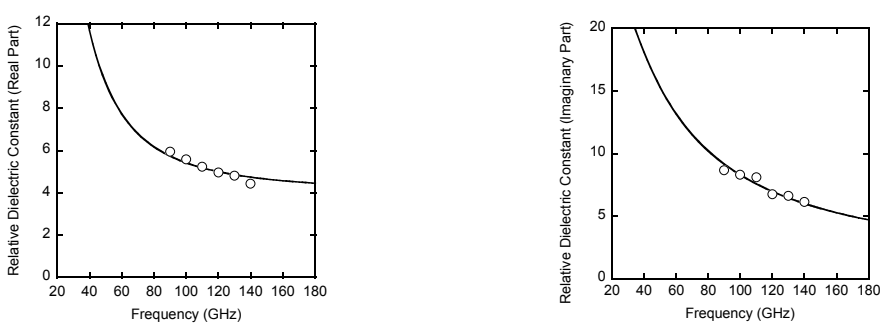

(a) (b)

Fig. 6: Frequency dependencies of complex relative dielectric constant of human skin. (a) shows the real part, and (b) shows the imaginary part. Solid curves represent the fitting using the equation (1).

5. Conclusion

We have developed a planar circulator circuit operating at around 300 GHz, and fabricated a sub-THz transceiver module for the reflection geometry imaging. Using this module, a millimeter-wave image of a human finger was obtained *in-vivo* at 270 GHz. A photonic millimeter-wave ellipsometry system was also developed for obtaining more qualitative information of biological substances. The complex relative dielectric constant of human skin was successfully measured *in-vivo* in the F-band. These techniques can play complimentary role for revealing information of biological substances, and thus will be a promising combination for biological applications.

6. Acknowledgments

The authors thank K. Yoshino, Y. Muramoto, T. Ishibashi, and M. Noshiro for their valuable discussions. This work was supported in part by a Grant-in-Aid for Scientific Research from the Ministry of Education, Culture, Sports, Science and Technology of Japan.

7. References

1. K. Yamamoto, M. Yamaguchi, F. Miyamaru, M. Tani, M. Hangyo, T. Ikeda, A. Matsushita, K. Koide, M. Tatsuno, and Y. Minami, "Noninvasive Inspection of C-4 Explosive in Mails by Terahertz Time-Domain Spectroscopy," *Jpn. J. Appl. Phys.*, **43**, 2004, pp. L414-L417.
2. T. Kleine-Ostmann, P. Knobloch, M. Koch, S. Hoffmann, M. Breede, M. Hofmann, G. Hein, K. Pierz, M. Sperling, and K. Donhuijsen, "Continuous-Wave THz Imaging," *Electron. Lett.*, **37**, 2001, pp. 1461-1463.
3. http://www.microwaveresourcesinc.com/
4. D. Bigourd, A. Cuisset, F. Hindle, S. Matton, E. Fertein, R. Bocquet, and G. Mouret, "Detection and Quantification of Multiple Molecular Species in Mainstream Cigarette Smoke by Continuous-Wave Terahertz Spectroscopy," *Opt. Lett.*, **31**, 2006, pp. 2356-2358.
5. T. Nagashima and M. Hangyo, "Measurement of Complex Optical Constants of a Highly Doped Si Wafer Using Terahertz Ellipsometry," *Appl. Phys. Lett.*, **79**, 2001, pp. 3917-3919.
6. T. Ishibashi, N. Shimizu, S. Kodama, H. Ito, T. Nagatsuma, and T. Furuta, "Uni-Traveling-Carrier Photodiodes," *Tech. Dig. Ultrafast Electronics and Optoelectronics (1997 OSA Spring Topical Meeting)*, Lake Tahoe, CA, 1997, pp. 166-168.
7. H. Ito, S. Kodama, Y. Muramoto, T. Furuta, T. Nagatsuma, and T. Ishibashi, "High-Speed and High-Output InP/InGaAs Uni-Traveling-Carrier Photodiodes," *IEEE J. Selected Topics in Quantum Electron.*, **10**, 2004, pp. 709-727.
8. H. Ito, T. Nagatsuma, A. Hirata, T. Minotani, A. Sasaki, Y. Hirota, and T. Ishibashi, "High-Power Photonic Millimetre Wave Generation at 100 GHz Using Matching-Circuit-Integrated Uni-Travelling-Carrier Photodiodes," *IEE Proc. Optoelectronics*, **150**, 2003, pp. 138-142.
9. A. Wakatsuki, T. Furuta, Y. Muramoto, T. Yoshimatsu, and H. Ito, "High-Power and Broadband Sub-Terahertz Wave Generation Using a J-Band Photomixer Module with Rectangular-Waveguide Output Port," *Proc. Int. Conf. on Infrared, Millimeter, and Terahertz Waves*, Pasadena, CA, 2008, pp. 1999-1-2.
10. F. Nakajima, T. Furuta, and H. Ito, "High-Power Continuous-Terahertz-Wave Generation Using Resonant-Antenna-Integrated Uni-Travelling-Carrier Photodiode," *Electron. Lett*., **40**, 2004, pp. 1297-1299.
11. H. Ito, K. Yoshino, Y. Muramoto, H. Yamamoto, and T. Ishibashi, "Sub-Terahertz-Wave Transceiver Module Integrating Uni-Traveling-Carrier Photodiode, Schottky Barrier Diode, and Planar Circulator Circuit," *IEEE J. Lightwave Tech*., **28**, 2010, pp. 3599-3605.
12. H. Yamamoto, H. Ito, and M. Noshiro, "Millimeter-Wave Ellipsometry of Human Skin Based on Photonics Technology," *IEICE Electron. Express*, **7**, 2010, pp. 964-968.
13. H. Ito, T. Ito, Y. Muramoto, T. Furuta, and T. Ishibashi, "Rectangular Waveguide Output Uni-Traveling-Carrier Photodiode Module for High-Power Photonic Millimeter-Wave Generation in the F-Band," *IEEE J. Lightwave Tech*., **21**, 2003, pp. 3456-3462.
14. R. Luebbers, F. P. Hunsberger, K. S. Kunz, R. B. Standler, and M. Schneider, "A Frequency-Dependent Finite-Difference Time-Domain Formulation for Dispersive Materials," *IEEE Trans. Electromagn. Compat.*, **32**, 1990, pp. 222-227.