Suppression of Spurious Frequencies in Microwave Dual-Band Bandstop Filters

Subash Vegesna and Mohammad Saed

Department of Electrical and Computer Engineering, Texas Tech University, Lubbock, TX 79409 USA.
(emails:subash.vegesna@ttu.edu, mohammad.saed@ttu.edu)

Abstract

This paper presents a design methodology for suppressing spurious frequencies in dual-band bandstop filters. Traditional methods used for suppression of spurious frequency for bandpass filter are not effective for bandstop filters. Two techniques are discussed in this paper for achieving spurious response suppression in bandstop filters. With the first technique, the spurious response is pushed to a higher frequency expanding the useable band, while with the second proposed technique spurious response is suppressed for dual-band bandstop filters. Initially, a bandstop filter with dual operating frequencies at 1.5 GHz and 2.6 GHz is designed and both techniques discussed in the paper are used to suppress the spurious response.

1. Introduction

Modern communication systems require various types of filters to be implemented either to allow a particular range of frequencies or to eliminate certain spurious frequencies. Suppression of spurious resonances is important in communication devices with high performance and selectivity. The presence of undesired spurious bands can seriously degrade the performance of the communication device and can be critical in certain applications [1]. Various methods have been proposed for spurious harmonic suppression for bandpass filters [1-4]. In [1], the first spurious response of the bandpass filter is suppressed by cascading a stopband filter. In [2, 3], dissimilar stepped-impedance resonators (SIRs) with same fundamental frequency but with different spurious frequencies are cascaded to improve the stopband rejection of the bandpass filter by mutual cancellation of spurious responses. In [4], the first spurious response of the bandpass filter is pushed to higher frequency by increasing the loading capacitance of the open-loop resonator. The methods discussed for suppressing spurious resonances for bandpass filters cannot be implemented for bandstop filters. Cascading a bandpass filter to suppress the spurious frequency of the bandstop filter introduces a spurious harmonic at the center frequency of the bandpass filter instead of suppressing it. Similarly, dissimilar bandstop resonators with same fundamental resonant frequency but with different spurious frequencies introduce extra harmonics. In [5], dual-band bandstop filter is realized using stepped impedance resonators with dual operating frequencies at 1.5 GHz and 3.15 GHz without any suppression of spurious frequencies and the second operating frequency is second harmonic of the fundamental frequency. There are hardly any methods described in the literature for spurious suppression of bandstop filters. Only the method of increasing the loading capacitance of the resonator and pushing the spurious frequency to higher frequency can be used for suppression of spurious resonance in bandstop filters even though the spurious response is not suppressed. In this paper, initially, a dual-band bandstop filter is designed without any spurious frequency suppression. Then, the method of increasing the loading capacitance of the resonator is used to push the first spurious frequency to high frequency for the dual-band bandstop filter. Both simulation results as well as measured results are presented for this method. A new method is proposed to suppress the spurious response for bandstop filters instead of pushing the spurious frequency to higher frequency and the design methodology, results and conclusions are discussed in later sections.

2. Design Methodology and Results

A dual-band bandstop filter is designed using open-loop resonators. It is taken care that the two resonant frequencies of the dual-band bandstop filter are not integral multiples of each other as opposed to the dual-band bandstop filter realized in [5]. Fig. 1(a) shows the simulated dual-band bandstop filter using the Electromagnetic (EM) simulator Ansoft Designer and the corresponding frequency responses ($|S_{11}|_{dB}$ and ($|S_{21}|_{dB}$) of the structure is shown in Fig. 1(b). From Fig. 1(b), we can see that the structure has dual operating frequencies at 1.5 GHz and 2.6 GHz and has a first spurious resonance at 3 GHz. The goals of this paper are to push the first spurious response at 3 GHz to at least 4 GHz using the method of increasing the loading capacitance of open-loop resonator [4] and also to completely suppress the first spurious response at 3 GHz using the method proposed in this paper.

978-1-4244-6051-9/11/$26.00 ©2011 IEEE

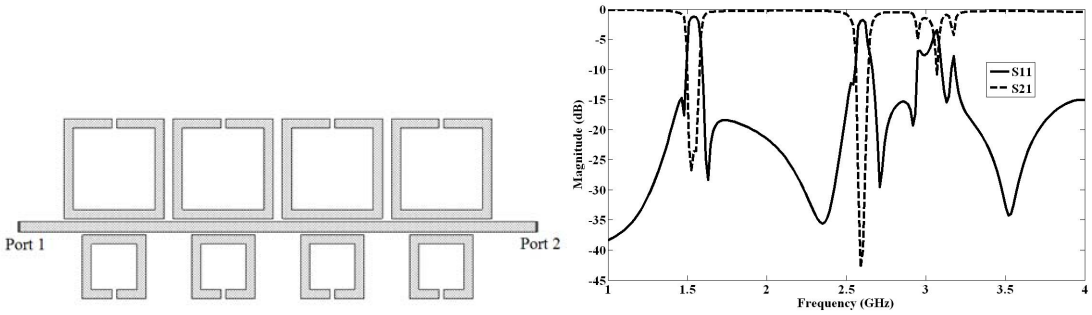

(a) (b)

Fig. 1. Dual-band bandstop filter (a) Layout of the filter (b) Simulated frequency response of the structure.

2.1 Increasing the loading capacitance

Using the technique proposed in [4], the loading capacitance of the open-loop resonator can be increased by increasing the outer edge of the open-loop resonator. As the loading capacitance is increased, the fundamental resonant frequency (f_0) and the first spurious resonant frequency (f_1) is decreased, however, the ratio of the first spurious resonant frequency to the fundamental frequency (f_1/ f_0) is increased. Fig. 2(a) shows open-loop resonator with increased outer edge width (W) and Fig. 2(b) shows the plot of f_1/ f_0 against the outer edge width.

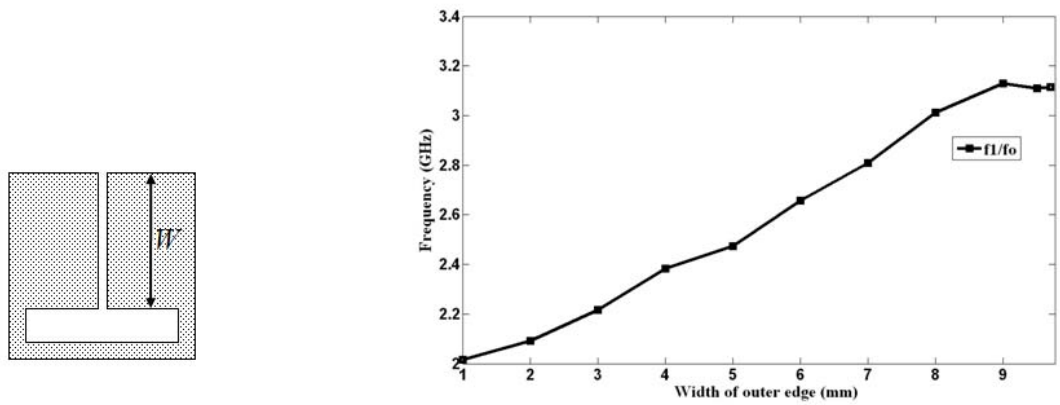

(a) (b)

Fig. 2. Open-loop resonator (a) with increased outer edge width (W) (b) plot of (f_1/ f_0) versus outer edge width.

For an outer edge width (W) of 9.7 mm, the first spurious frequency response is pushed to 4 GHz. The simulated and fabricated structure of the dual-band bandstop filter with outer edge width of 9.7 mm is shown in Fig. 3. The structure shown in Fig. 3(a) is simulated using Ansoft Designer and is fabricated on Rogers RT/Duroid RO6010 substrate with relative permittivity of 10.2 and dielectric thickness of 1.27 mm using a milling machine. The photograph of the fabricated filter structure is shown in Fig. 3(b). The frequency responses ($|S_{11}|_{dB}$ and ($|S_{21}|_{dB}$) of the simulated dual-band bandstop filter is shown in Fig. 4(a) and the frequency response of the fabricated filter structure was measured using the HP8753C vector network analyzer and measured frequency responses ($|S_{11}|_{dB}$ and ($|S_{21}|_{dB}$) of the fabricated filter is shown in Fig. 4(b). From the measured frequency response shown in Fig. 4(b), we can observe that the first spurious frequency is pushed to 4 GHz from 3 GHz when the outer edge width of the resonator is increased to 9.7mm. The in-band insertion loss ($|S_{21}|$) is equal to 24 dB and 32 dB and in-band return loss ($|S_{11}|$) is equal to 4 dB and 2.4 dB at 1.5 GHz and 2.6 GHz respectively for the realized dual-band bandstop filter with increased outer edge width of the resonator. Thus, the method of increasing the loading capacitance of the resonator to push the spurious frequency to higher frequencies has been successfully implemented for the dual-band bandstop filter.

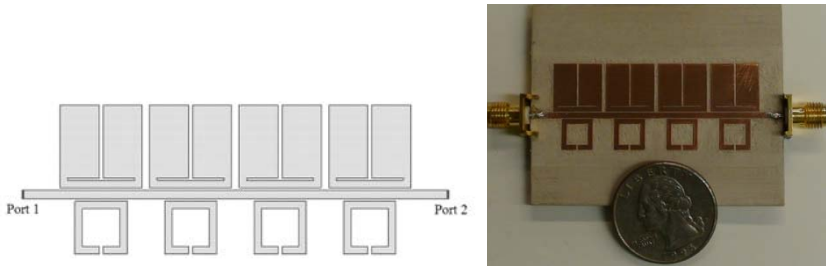

(a) (b)

Fig. 3. Modified dual-band bandstop filter (a) simulated structure (b) fabricated structure.

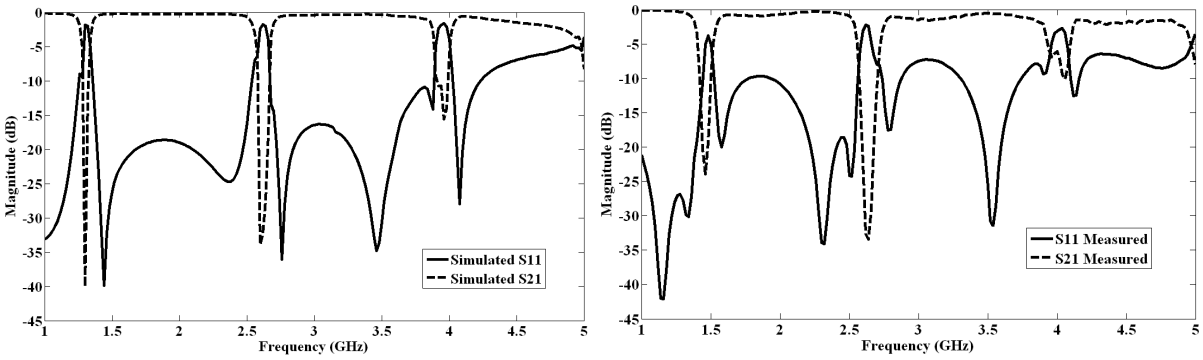

(a) (b)

Fig. 4. (a) Simulated frequency response (b) measured frequency response with outer edge width of 9.7mm.

2.2 New method for Spurious Response Suppression

The method of increasing the loading capacitance of the resonator can only push the first spurious frequency to higher frequency instead of suppressing it. As mentioned earlier, the method of using dissimilar resonators is not effective for spurious suppression in bandstop filters. The proposed filter structure for suppression of spurious resonances for the bandstop filters is shown in Fig. 5. Two bandpass filters centered at first spurious harmonic frequency f_1 of the stopband filter and three quadrature hybrids are used for spurious suppression. The quadrature hybrids should have a bandwidth of atleast from f_0 to f_1 and Lange coupler is used to achieve a wide-band response. The operation of filter structure shown in Fig. 5 will be explained in the conference.

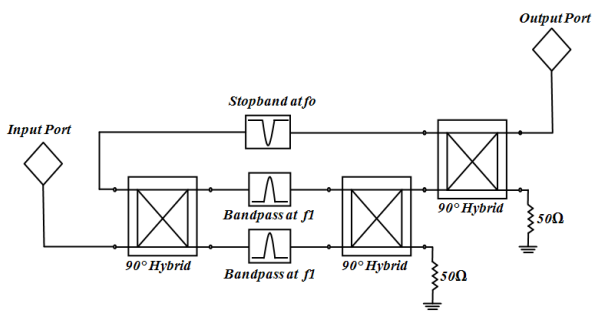

Fig. 5. Proposed filter structure to suppress first spurious frequency (f_1) for bandstop filters.

The proposed filter structure shown in Fig. 5 is used to suppress the first spurious frequency of the dual-band bandstop filter shown in Fig. 1(a). Bandpass filter is centered at 3 GHz which is the first spurious resonance of the dual-band bandstop filter. Fig. 6 shows the comparison of the simulated frequency response ($|S_{11}|_{dB}$ and ($|S_{21}|_{dB}$) of the dual-band bandstop filter before and after spurious harmonic suppression. We can observe from Fig. 6(a) that the spurious resonance after suppression is below 20 dB.

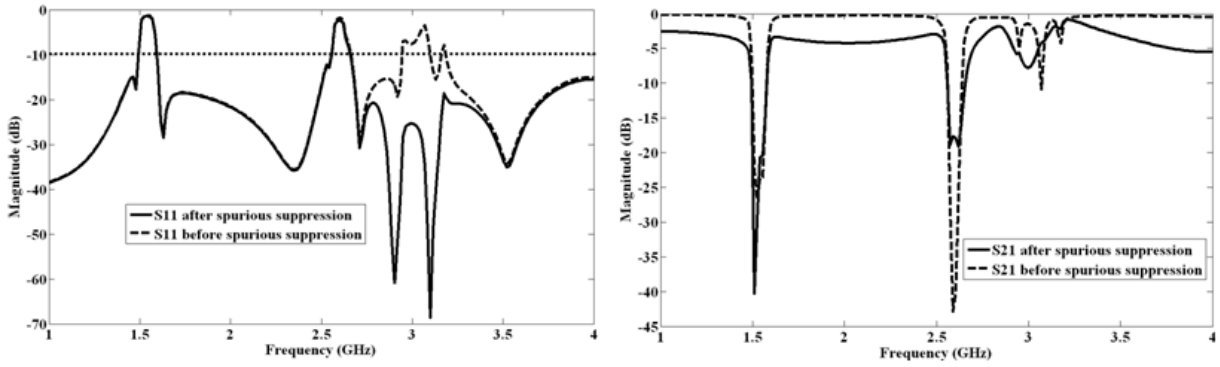

(a) (b)

Fig. 6. Comparison of simulated (a) $|S_{11}|_{dB}$ frequency response (b) $|S_{21}|_{dB}$ frequency response.

3. Conclusion

Two methods were presented to deal with the spurious response present in bandstop microstrip filters. The first method which involves increasing the loading capacitance of the resonator will push the spurious frequency to higher frequency, but it does not suppress it. The second method suppresses the spurious response of the dual-band bandstop filter achieving rejection levels of at least 20 dB. Although the proposed filter configuration in this paper occupies a larger area than a filter without spurious response suppression, it can be used in applications where high sensitivity and high performance devices with very good suppression of spurious frequencies are required and where circuit size is not a constraint.

4. References

1. J. Garcia-Garcia, F. Martin, F. Falcone, J. Bonache, I. Gil, T. Lopetegi, M. A. G. Laso, M. Sorolla, and R. Marques, "Spurious passband suppression in microstrip coupled line bandpass filters by means of split ring resonators," *IEEE Microw. Wireless Compon. Lett.*, vol. 14, no. 9, pp. 416–418, Sep. 2004.

2. C. -F. Chen, T. -Y. Huang, and R. -B. Wu, "Design of microstrip bandpass filters with Multiorder spurious-mode suppression," *IEEE Trans. Microwave Theory Tech.*, vol. 53, no. 12, pp. 3788-3793, Dec. 2005.

3. S. -C. Lin, P. -H. Deng, Y. -S. Lin, C. -H. Wang, and C. -H. Chen, "Wide-stopband microstrip bandpass filters using dissimilar quarter-wavelength stepped-impedance resonators," *IEEE Trans. Microwave Theory Tech.*, vol. 54, no. 3, pp. 1011-1018, Mar. 2006.

4. J. -S. Hong, and M. J. Lancaster, "Theory and experiment of novel microstrip slow-wave open-loop resonator filters," *IEEE Trans. Microwave Theory Tech.*, vol. 45, no. 12, pp. 2358-2365, Dec. 1997.

5. K. -S. Chin, J. -H. Yeh, and S. -H. Chao, "Compact dual-band bandstop filters using stepped-impedance resonators," *IEEE Microw. Wireless Compon. Lett.*, vol. 17, no. 12, pp. 849-851, Dec. 2007.