Estimation method based on the surface scanned EM field data with respect to SAR measurement

Teruo ONISHI, Katsuki KIMINAMI, and Shinji UEBAYASHI

Wireless Laboratories, NTT DoCoMo Inc., Kanagawa, Japan

ABSTRACT The compliance test procedures for Specific Absorption Rate (SAR) measurement with respect to mobile phones were standardized by the IEC, IEEE, ARIB, and CENELEC. The procedure for the SAR measurement described in the standards enables precise measurement. However, a method for rapidly performing the SAR measurement has been desired because the 3-D scanning is time consuming. This paper proposes an estimation method that theoretically estimates the SAR from the surface scanned electric field data, which basically applies the Equivalent theorem and the contour integration form of the Maxwell's Equations. It is confirmed from numerical validations that the proposed method can estimate three-dimensional SAR distribution within 1.5% compared to the original SAR using a two-dimensional electric field.

1. INTRODUCTION

The Specific Absorption Rate (SAR) measurement procedures with respect to mobile phones for compliance testing were developed by the IEC [1], IEEE [2], ARIB [3], and CENELEC [4]. The standards established by these organizations are well harmonized and provide a rigorous common SAR measurement procedure. However, the present SAR measurement procedure has a problem, which may be time consuming if the measurement is performed in a manufacturing plant or in research and development. According to the standards, a two-step procedure is adopted to find the maximum spatial average SAR. First, an "Area-scan" is performed to find out maximum SAR by a two-dimensional measurement and then a measurement is performed in three-dimensional volume including the maximum SAR point called "Zoom-scan". If the area of the "Area-scan" is 80 × 80 mm^2 and the measurement interval is 8 mm, the number of measurement points is 121. The minimum volume size of the "Zoom-scan" is 30 × 30 × 30 mm^3 with at least 8 mm steps in a tangential plane and 5 mm steps in depth. For example, the total number of measurements in this case is 175 and it takes about 15 min. to perform the measurement. It should be noted that this is only one condition for the SAR measurement. Recently, various types of the usage of the mobile phone have become popular, i.e. not only mounting the body but also taking a photo or video, sending E-mail, using the TV-phone, and so on. It is anticipated that the number of SAR measurements to evaluate these functions will be increased and will become more time consuming. Therefore, a few studies were conducted on estimation methods for shortening the measurement time [5], [6]. This paper proposes a SAR estimation method that theoretically estimates the SAR from a surface scanned electric field measurement data. The method employs the amplitude and phase of an electric field based on the Equivalent theorem and the contour integral form of Maxwell's equations [7]. A numerical validation of this method is also performed.

2. ESTIMATION METHOD

2.1 3-D SAR estimation method using 2-D electric and magnetic fields

Basically, this method employs the Equivalent theorem [7]. Using this theory, electric field $\boldsymbol{E}_{est}$ can be calculated by

$$\boldsymbol{E}_{est}(x,y,z)=\frac{1}{4\pi}\int_s\{-j\omega\mu(\boldsymbol{n}\times\boldsymbol{H}')\phi+(\boldsymbol{n}\times\boldsymbol{E}')\times\nabla\phi+(\boldsymbol{n}\cdot\boldsymbol{E}')\nabla\phi\}dS \tag{1}$$

$$\phi=\frac{e^{-jkr}}{r} \tag{2}$$

$$r=\sqrt{(x'-x)^2+(y'-y)^2+(z'-z)^2} \tag{3}$$

where $\boldsymbol{E}'$ and $\boldsymbol{H}'$ are respectively the electric and magnetic fields on a closed surface (S) that surround a primary source such an antenna. Term $\boldsymbol{n}$ is a unit vector normal to the surface and ϕ is the green function. Figure 1 shows the electromagnetic sources and generated electromagnetic fields outside the closed surface (S). $\boldsymbol{n}\times\boldsymbol{H}'$, $-\boldsymbol{n}\times\boldsymbol{E}'$, and $\boldsymbol{n}\cdot\boldsymbol{E}'$ are the equivalent surface current, the equivalent magnetic current, and equivalent surface electric charge, respectively. This Eq. (1) means that if electric and magnetic fields on the closed surface (S) are known, the electric fields outside of the

surface (S) can be calculated even though any charge or current inside the surface (S) are unknown. In general, the charge or the current inside the surface and the equivalent charge or source are called the primary and the secondary sources, respectively.

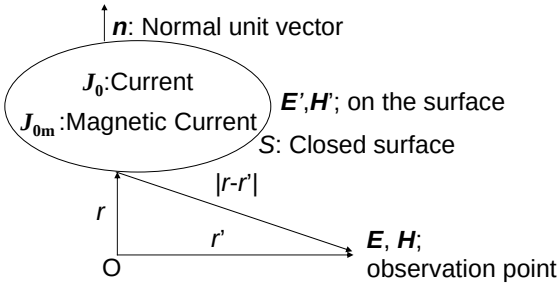

Fig. 1 Electromagnetic sources generates electromagnetic fields at an observation point.

The proposed SAR estimation method employs the above theorem. Figure 2 shows a model of the concept used in the proposed method. In Fig. 2, a radiating source, which is called the primary source, is located on the left side of the phantom. The observation plane ($Ly \times Lz$) is located x_0 away from the phantom surface. There is no surrounding surface in Fig. 2. Therefore, to enable the use of Eq. (1), the following conditions are assumed:

- Electromagnetic waves are only incident through the observation plane.
- No reflection occurs within the phantom.
- Electric and magnetic fields on the observation plane are assumed as secondary sources.

By applying these assumptions, Eq. (1) can be used. In this case, the measured amplitude and phase of $\boldsymbol{E}'$ and $\boldsymbol{H}'$ on the observation plane (secondary source) are used to estimate $\boldsymbol{E}_{est}$ in the region within the phantom.

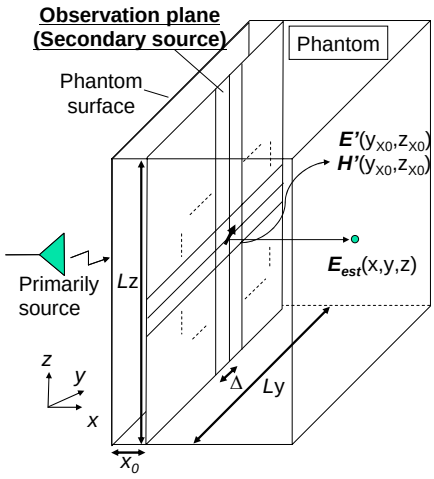

Fig. 2 Concept of the proposed method.

2.2 3-D SAR estimation method using a 2-D electric field

As proposed in 2.1, if both the amplitude and phase of both the electric and magnetic fields on a certain plane can be measured, the SAR in depth can be estimated using Eq. (1). However, this method requires both electric and magnetic fields measurement even though the rigorous method. Therefore, in order to simplify the measurement, we consider using only the electrical or magnetic field data. Hirayama *et al*. previously proposed, a method in which the electric field is calculated using the measured magnetic field [8]. They used the Yee cell, which is very well known for use in the FD-TD method defined by Yee [9]. In this study, a more general expression to calculate the field components from another one is explained. The following equation is the integral form of Maxwell's equations.

$$\oint_C \boldsymbol{E} \cdot d\boldsymbol{s} = -j\omega\mu_0 \int_S \boldsymbol{H} \cdot \boldsymbol{n} d\boldsymbol{a} \tag{4}$$

where C and $\boldsymbol{n}$ are a closed contour path and a unit normal vector, respectively. da is an element of area. Equation (4) is expressed in the frequency domain. As a result, only the amplitude and phase of the electric field are required to estimate the SAR in depth if Eqs. (1) and (4) are combined.

3. NUMERICAL VALIDATION

In order to validate the proposed method, the FD-TD calculation results including the amplitude and phase were used. Figure 3 shows a model that comprises a half-wave dipole and a flat phantom. This method can be applied to an arbitrary shape; however, in order to simplify the calculations, a flat phantom was used. The distance between the antenna feed point and the surface of the phantom was 15 mm, which is based on the SAR measurement standard [1]. The frequency was 900 MHz and the cell size used in the FD-TD method was 2.5 mm. The observation plane was located at x_0 = 1.25 mm from the phantom surface. Figure 4 shows the estimated SAR distributions along the x-axis, which were calculated from the electromagnetic and the electric fields, compared to the original SAR distribution calculated using the FD-TD method. It is clear that these two estimated distributions agree with the original one very well. Table 1 also shows that the 10g-average SAR can be estimated from the two-dimensional electromagnetic field data within 1.5% compared to the original 10g-average SAR.

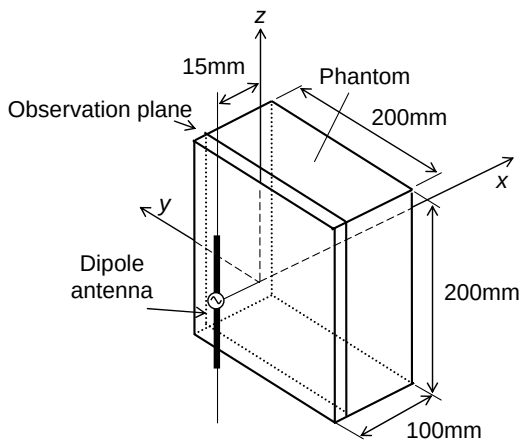

Fig. 3 Validation model.

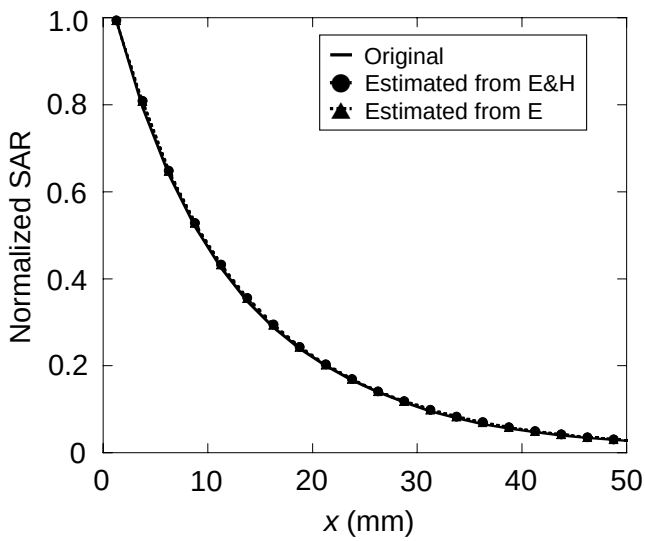

Fig. 4 Estimated SAR distributions along x-axis.

Table 1 Difference of 10g-average SAR with the original one

	Difference [%]
Estimated from 2-dimensional electric and magnetic field; Eq. (1)	1.33
Estimated from 2-dimensional electric field: Eq. (1) and (4)	1.20

4. CONCLUSION

A three-dimensional SAR estimation method, using a two-dimensional electric field based on a theoretical method, was proposed in order to reduce time required for SAR measurement. The method employs both the amplitude and the phase of an electric field. It was confirmed from numerical validations that the proposed method could estimate the three-dimensional SAR distribution within 1.5% compared to the original SAR using a two-dimensional electric field. It is emphasized that the proposed method can be applied to not only a flat phantom, but also to an arbitrary-shaped phantom. In addition, the method can be used for the entire frequency range defined by the IEC [10]. Furthermore, it is expected that this technique will be applied to both liquid and solid phantoms, and both single probe and multiple probes systems.

REFERENCES

[1] IEC 62209-1, “Procedure to determine the specific absorption rate (SAR) for hand-held devices used in close proximity to the ear (frequency range of 300 MHz to 3 GHz),” Feb. 2005.

[2] IEEE Recommended practice for determining the peak spatial-average Specific Absorption Rate (SAR) in the human head from wireless communications devices: measurement techniques, IEEE Standard 1528-2003, 2003.

[3] ARIB STD-T56, “Specific absorption rate (SAR) estimation for cellular,” ver. 2.0, Jan. 2002. (in Japanese)

[4] EUROPEAN STANDARD EN50961, “Basic standard for the measurement of specific absorption rate related to human exposure to electromagnetic fields from mobile phones (300MHz - 3GHz),” July 2001.

[5] O. Merckel, J.-Ch. Bolomey, and G. Fleury, “Parametric model approach for rapid SAR measurements,” IMTC2004, Instrumentation and Meas. Tech. Conf., pp. 178 – 183, Como, Italy, May 2004.

[6] M. Y. Kanda, M. G. Douglas, E. D. Mendivil, M. Ballen, A. V. Gessner, and C.K. Chou, “Faster determination of mass-averaged SAR from 2-D area scans,” IEEE Trans. Microwave Theory and Tech., vol. 52, no. 8, pp. 2013-2020, Aug. 2004.

[7] Stratton, “Electromagnetic theory,” McGraw-Hill Book Co., 1941.

[8] H. Hirayama and Y. Kami, “Near-field measurement using a Yee scheme for source location and pointing vector evaluation,” The 15th International Zurich Symposium on EMC, pp.661-666, Zurich, Switzerland, 2003.

[9] K. S. Yee, “Numerical solution of initial boundary value problems involving Maxwell's equation in isotropic media,” IEEE Trans. Antenna Propagat., vol. 14, no. 3, pp. 302-307, March 1966.

[10] IEC TC106 PT62209 Part2 (draft)