GENERATION OF LABORATORY PLASMA IN 6.4 GHZ ECR SOURCE FOR MCHI PRODUCTION AT VECC

G.S. Taki, D.K. Chakraborty, P.K. Ray* and R.K. Bhandari
VECC, Block - AF, Bidhannagar, Kolkata-700064
**** Bengal Engineering and Science University, Shibpur, Howrah-711103***
e-mail: gstaki@veccal.ernet.in

Electron Cyclotron Resonance (ECR) ion source is a magnetically confined high density hot plasma machine producing multiply charged heavy ions (MCHI) by successive ionization process. ECR ion source is an essential constituent to explore various fields of research over an energy range of a few eV to a few TeV. MCHI are generally used in various types of accelerators for nuclear research extending the study of quark gluon plasma through ultra-relativistic heavy ion collisions. It facilitates research on exotic radioactive nuclei and astrophysical phenomenon which happened during the creation of the universe. A 6.4 GHz ECR ion source was indigenously developed at VECC, Kolkata, for use in the cyclotron. It has been operating continuously for injecting oxygen, nitrogen and neon beams to the cyclotron since 1997.

VEC-ECR is a single stage ion source with a negatively biased electron repeller placed on the axis near the injection mirror point (Fig.1). Resonant microwave plasma discharge takes place between two sets of axial mirror coils, isolated by 25 mm thick soft iron plates [1]. The injector and extractor mirror ratios are 6 and 4.5 respectively with a minimum field of 1.1 kGauss.

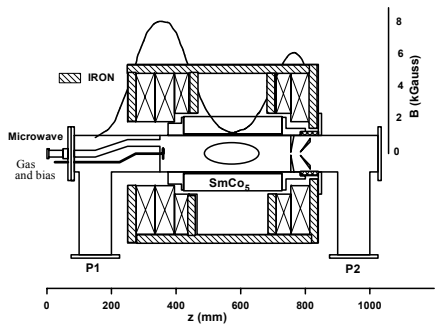

Fig. 1. Latest schematic of VEC-ECR

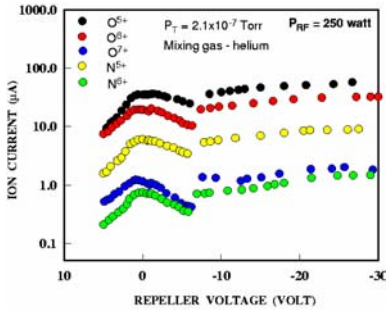

Fig. 2. Jump and enhancement of ion current

The plasma cavity is made from oxygen free high conductivity copper billet of inside diameter 108mm and length 370 mm. Outside the diameter six slots have been machined out to mount discrete blocks of $SmCo_5$ permanent magnets of size 50mm X 38mm X 61mm having remnant magnetism of about 8.0 kGauss, magnetized along 50 mm dimension. The field diameter of the assembly is 118mm with radial field of 3.8 kGauss on the chamber wall.

RESULTS

The plasma parameters of an ECR source are studied by measuring extracted MCHI current. The microwave power, mirror magnetic field, gas flow and gas mixing ratio, electron repeller voltage are the most important tuning parameters. Negatively biased repeller disc and wall coating are two efficient methods to supply cold electrons to the ECR plasma. The supply of cold electrons from a biased electron repeller enhanced the performance of VEC-ECR by an order of magnitude. This improvement may be due to the reduction of plasma potential with increased ion confinement. Our experiment showed an abrupt jump in ion current and charge state distribution with disc bias voltage (Fig.2). The ratios of mixed-gas to feed-gas vary from 3 to 8 for different ions. The typical value of negative voltage applied to electron repeller lies between 30 to 100 volts for optimum ion current. The position of the repeller electrode is also very important for peak performance of the source. In another experiment, the measured intensities of various charge states at different field levels showed exponential variation and a charge state dependence. This ion source can produce 6.5 μA of Ar^{12+}, 1.5 μA of Kr^{20+} and 1.0 μA of Xe^{31+} satisfactorily.

REFERENCE

[1] G.S.Taki, D. K. Chakraborty, and R. K. Bhandari, "6.4 GHz ECR Ion Source at VECC," PRAMANA-J. Phys, Vol. 59, No. 5, pp.775-780, Nov.2002.