Multi-user Detection for Signals Having Different Symbol Rates

Koji Maeda (1) **Takahiro Asai** (1) **Hitoshi Yoshino** (1)

(1) ***Wireless Laboratories, NTT DoCoMo, Inc., Japan***
3-5 Hikari-no-oka, Yokosuka-shi, Kanagawa, 239-8536 JAPAN
Telephone: +81–46–840–3551, Fax: +81–46–840–3789
E-mail:{maedakou, asai, yoshinoh}@nttdocomo.co.jp

ABSTRACT
This paper proposes a multi-user detector that detects signals having different symbol rates, within a reasonable level of computational complexity. The proposed multi-user detector successively cancels undesired signals for each user in a received signal. In the proposed method, the undesired signals are band-limited using a band-pass filter for a desired signal, and the desired signal is detected from the band-limited signal. A replica of the desired signal is generated based on soft-output from a channel decoder and subtracted from the received signal in order to remove its influence on the signal detection of other users. Then, another user is detected by using the residual signal obtained by subtracting the replica signal. A performance comparison of the proposed method to a multi-user detector based on the maximum likelihood sequence estimation (MLSE) is presented based on the computer simulations. The computer simulation results show that the proposed method can separate the signals effectively, and that its BER performance for a narrow-band signal approaches that of the MLSE-based multi-user detector when the symbol rate ratio of the wide-band signal to the narrow-band signal becomes large.

Keywords: Multi-user detection, different symbol rates, successive cancellation, band limitation

1. INTRODUCTION

Wireless ubiquitous communication systems have been studied as future wireless communication systems. In these systems, wireless devices would be able to select parameters including the bandwidth, modulation scheme and carrier frequency, using which they would communicate with their own destination stations. These devices, however, may have to coexist in the same frequency band due to the scarcity of the available frequency resources. In this situation, multi-user detection techniques are promising approaches to avoid harmful interference, which has various radio parameters, and to detect signals for each user from a received signal with high reliability.

In the case that several users send their own signals with various symbol rates at the same time over the same frequency band, the effect of inter-symbol interference (ISI) should be considered at a detector, even if zero ISI filters such as a raised cosine filter are applied and there is no delayed wave. Although the multi-user detectors employing linear processing with multiple receiver antennas can detect those signals without extra processing against the ISI [1, 2, 3], it is difficult to detect the signals when the channel correlation among the received signals at each receiver antenna is high. Therefore, we proposed a multi-user detector based on the maximum likelihood sequence estimation (MLSE) for signals having different symbol rates [4]. The MLSE-based multi-user detector, in which the ISI due to the difference in the symbol rates is considered in a trellis diagram, exhibits excellent multi-user detection performance. It is, however, well known that the complexity level of the MLSE increases exponentially with the number of signals in the received signal.

Therefore, in this paper, we propose a successive multi-user detector for signals having different symbol rates. In the proposed detector, each signal is detected successively using band limitation and replica generation with soft-decision output from channel decoders. By using such a successive process, the complexity level of the proposed detector is reduced to a linear growth with the number of signals. Simulation results show that the proposed detector detects signals effectively within a reasonable level of computational complexity.

2. MULTI-USER DETECTOR FOR SIGNALS WITH DIFFERENT SYMBOL RATES

2.1. Channel Model

When a received signal, $r(t)$, includes K signals that have various symbol rates, the received signal can be expressed as the following equation [4],

$$r(t) = \sum_{k=1}^{K} \left\{ \sum_{d_k=1}^{D_k} \left\{ \sum_{l=0}^{L_k-1} a_k(l) h_{t,k}(t - lT_k - \tau_{k,d_k}(t)) \right\} h_{p,k}(t, \tau_{k,d_k}(t)) \right\} + n(t) \quad (1)$$

where $a_k(l), (l = 0, ..., L_k - 1)$ is a modulated signal sequence, and L_k is the number of transmitted symbols in a single frame of Signal k. The symbol rate of Signal k is $1/T_k$. Term $h_{t,k}(t)$ and $h_{p,k}(t, \tau)$ are the impulse response of a transmission filter and that of the time varying transmission channel of Signal k, respectively. Term $\tau_{k,d_k}(t)$ is the delay time of the d_k-th path of Signal k at instant t, and Signal k has D_k components. Term $n(t)$ is additive white Gaussian noise (AWGN).

In the case where the signals in the received signal employ various symbol rates, the sampled received signal suffers severely from the ISI components of each signal due to the different symbol rates and band limitation [4]. For example, in the case of $K = 2$, $D_1 = D_2 = 1$, $\tau_{1,1}(t) = \tau_{2,1}(t) = 0$, $h_{p,1}(t, 0) = h_{p,2}(t, 0) = 1$ for $\forall t$, and $gT_1 = T_2$ ($g > 1$), by sampling the signal with the sampling duration of T_1, the sampled received signal, $y(mT_1)$, can be expressed by

$$y(mT_1) \quad = \quad a_1(m) + \sum_{l=0}^{L_2-1} a_2(l) h_{t,2} \left(\left(\frac{m}{g} - l \right) T_2 \right) + n(mT_1). \tag{2}$$

The second term on the right-hand side in (2) indicates that the sampled received signal contains multiple ISI components of Signal #2 even under fading-free conditions.

2.2. MLSE-Based Multi-user Detector

The MLSE-based multi-user detector generates a replica of the received signal for all possible symbol sequence candidates, and concurrently estimates signals in the received signal according to a trellis diagram [4]. Fig. 1 shows an example of the trellis diagram where two signals, which employ a binary modulation, are received and the ratio of their symbol rates is given by (Signal #1) : (Signal #2) $= 3 : 2$. The states of the trellis diagram are defined using the ISI components of each signal. In the trellis diagram, the state transition timing is determined by the symbol rates of each signal. For example, as shown in Fig. 1, when sampling rate T_0 satisfies $T_0 = T_1/2$, where T_1 is the symbol duration of Signal #1, the states of Signal #1 in the trellis diagram transit once every two samples. Similarly, when $T_0 = T_2/3$ is satisfied, the states of Signal #2 transit once every three samples. According to the trellis diagram, the MLSE-based multi-user detector selects the combination of symbol sequence candidates of each signal, which has the maximum likelihood, as the transmitted symbol sequences of each signal.

2.3. Proposed Successive Multi-user Detector

The proposed multi-user detector is shown in Fig. 2. The principle of the proposed method is also shown in Fig. 3. The proposed method works as follows.

I) The received signal, $r(t)$, is band-limited using a band-pass filter for Signal #1.

II) The band-limited signal is equalized at an equalizer. Then, at a soft-in soft-out decoder, the decoded symbol sequence of the signal is obtained. Simultaneously, log-likelihood-ratio (LLR) values of coded symbols are calculated [5].

III) The replica of Signal #1 is generated at a replica generator. The replica signal is given by

$$\hat{s}_1(t) \quad = \quad \sum_{d_1=1}^{D_1} \sum_{l=0}^{L_1-1} \hat{a}_1(l) h_{t,1}(t - lT_1 - \hat{\tau}_{1,d_1}(t)) \hat{h}_{p,1}(t, \hat{\tau}_{1,d_1}(t)) \tag{3}$$

where $\hat{h}_{p,1}(t, \tau)$ is the estimated impulse response of the transmission channel of Signal #1 at a certain instant, t, and delay time, τ. Term $\hat{a}_1(l)$ is the replica of the l-th transmitted symbol of Signal #1, which is given by using LLR values [6]. Term $\hat{\tau}_{k,d_k}(t)$ is the estimated delay for the d_k-th component of the k-th signal at the instant of t.

IV) The generated replica signal is subtracted from the received signal. The residual signal after subtraction, $r_2(t)$, can be expressed by $r_2(t) = r(t) - \hat{s}_1(t)$, where $r_p(t)$ is the signal input to the band-pass filter for Signal #p. Similarly, after the m-th process which detects Signal #m, the residual signal is obtained by subtracting the replica signals generated previously, and it can be expressed by $r_{m+1}(t) = r(t) - \sum_{w=1}^{m} \hat{s}_w(t)$.

V) Then, the next signal detection process is performed by using the residual signal. □

In addition, the proposed method can enhance the replica generation accuracy and obtain decision results with high reliability by iterating all of the above processes at the expense of the extra processing time. On the m-th detecting process of the i-th iteration, the input signal to the band-pass filter for Signal #m, $r_{m,i}(t)$, can be expressed by

$$r_{m,i}(t) \quad = \quad r(t) - \sum_{w_1=1}^{m-1} \hat{s}_{w_1,i}(t) - \sum_{w_2=m+1}^{K} \hat{s}_{w_2,i-1}(t) \tag{4}$$

where $\hat{s}_{w,i}(t)$ is the replica of Signal #w at the i-th iteration. If all replicas, $\hat{s}_{w_1,i}$ and $\hat{s}_{w_2,i-1}$ are generated quite accurately, the residual signal contains almost only Signal #m and AWGN. Therefore, the proposed method can detect the signals in the received signal with high reliability.

2.4. Complexity Comparison

Although the MLSE-based multi-user detector exhibits excellent detection performance, the computational complexity proportionally increases as the number of states in the trellis diagram increases. In addition, the number of states exponentially increases as the numbers of users and their ISI components considered in the detector increase. Here, in the

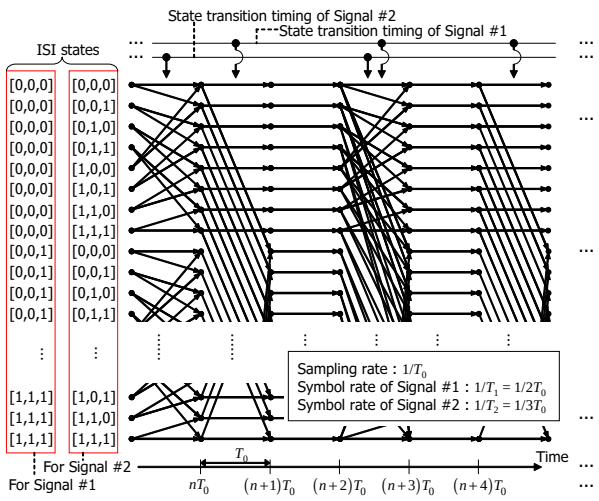

Fig. 1. Example of trellis diagram of MLSE-based multi-user detector

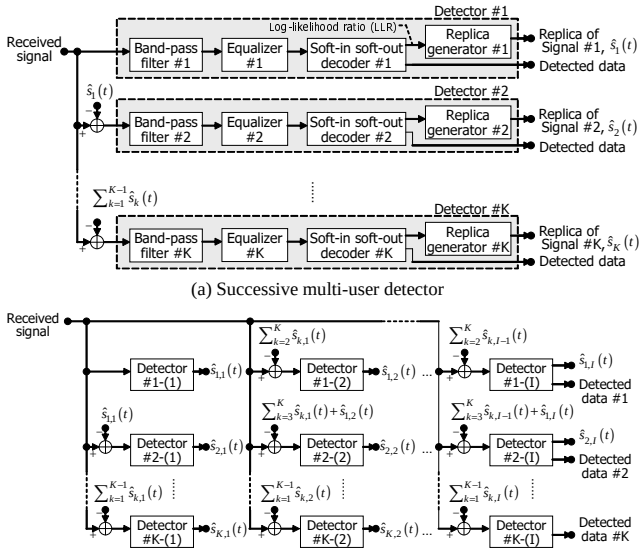

(a) Successive multi-user detector

(b) Successive multi-user detector with iterations

Fig. 2. Proposed successive multi-user detector

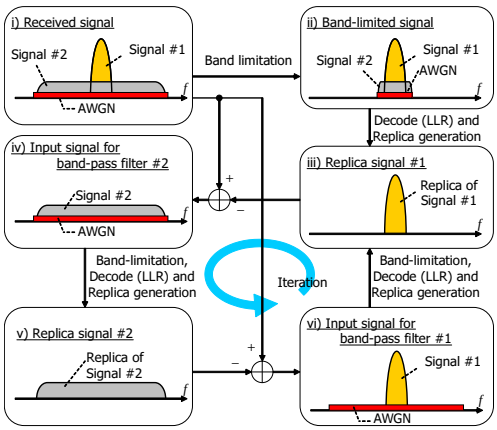

Fig. 3. Principle of proposed method

Table 1. Simulation parameters

	Signal #1	Signal #2
Modulation	QPSK	
Symbol rate	20 k symbols/sec.	60, 300 k symbols/sec.
Training sequence	10 symbols	
Data sequence	90 symbols	290, 1490 symbols
Encode	Convolutional code (rate $= 1/2$, constraint length = 3)	
Band-pass filter	Root raised cosine roll-off filter (roll-off factor : 0.5)	
Channel	Single-path Rayleigh fading channel (max. Doppler freq. $= 5$ Hz)	
Channel estimation	RLS algorithm (forgetting factor $= 0.9$)	
Decode	Max log-MAP	

MLSE-based multi-user detector, since all the signals are processed simultaneously, the sampled received signal suffers from their ISI components due to not only multi-path propagation, but also band limitation, as shown in (2). Therefore, the computational complexity of the MLSE-based multi-user detector is proportional to $M^{K(P+D)}$, when there are K signals in the received signal that employ an M-ary modulation, and the numbers of ISI components due to multi-path propagation and band limitation for each signal are P and D, respectively. Accordingly, the implementation of the MLSE-based multi-user detector may become infeasible as the number of users to be detected increases, even if the ISI components are reasonably truncated at the cost of the detection performance from a practical point of view.

In contrast to this, in the proposed method, since each signal is respectively detected at their own signal detection processes, it is unnecessary to consider the ISI components of other user signals, i.e., D becomes zero. In this case, when the number of iterations is I, the computational complexity for equalization, which is the dominant process of the proposed method from the viewpoint of the amount of computational complexity where P is large, is proportional to $M^P KI$. This shows that the proposed method significantly reduces the computational complexity compared to the MLSE-based multi-user detector, especially in case where a large number of users are detected.

3. SIMULATION RESULTS

Simulation parameters are given in Table 1. In the simulations, we assume that the number of signals is two and the number of iterations of the proposed method is four. Fig. 4 shows the average bit-error-rate (BER) performance of the proposed method. For comparison, the BER performance of the MLSE-based multi-user detector is also shown in the figure. Channel estimation is individually performed for each signal in the proposed method in order to reduce the level of computational complexity of the detection process, while it is performed simultaneously in the MLSE-based multi-user detector. The average received signal energy per bit-to-noise power spectrum density ratio, E_b/N_0, is set to 20 dB for

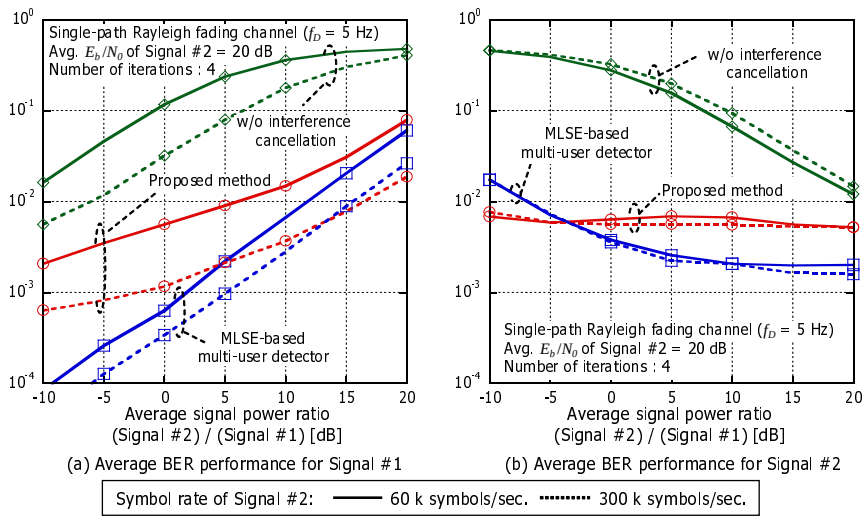

Fig. 4. BER performance of proposed method and MLSE-based multi-user detector

Signal #2. It is assumed that only three ISI components are considered for each signal in the trellis diagram of the MLSE-based multi-user detector. Therefore, in this simulation, the number of states of the MLSE-based multi-user detector is $4^{3\times 2} = 4096$.

In Fig. 4, the BER performance of the proposed method for Signal #1 is superior to that without interference cancellation by an approximate average signal power ratio of 20 dB at the BER $= 2.0 \times 10^{-2}$ when the symbol rate of Signal #2 is 60 k symbols/sec.. When the symbol rate of Signal #2 is 300 k symbols/sec., the BER performance of the proposed method for Signal #1 is remarkably improved. Indeed, the BER performance of the proposed method is nearly equivalent to that of the MLSE-based multi-user detector in the range of the average signal power ratio > 10 dB when the symbol rate of Signal #2 is 300 k symbols/sec.. This is because when the symbol rate ratio of the wide-band signal (Signal #2) to the narrow-band signal (Signal #1) is large, the interference signal power from the wide-band signal to the narrow-band signal is suppressed by band limitation.

On the other hand, the proposed method can attain the average BER of 8.0×10^{-3} for Signal #2 for the whole range of the signal power ratio regardless of the symbol rate of Signal #2, although the BER performance of the proposed method is degraded compared to that of the MLSE-based method at an average signal power ratio (i.e., signal-to-interference ratio (SIR) for Signal #2) > 0 dB. The average BER performance of the MLSE-based method for both Signals #1 and #2 is degraded in the range of low SIR values for each signal. This is caused by the truncation of the ISI components.

4. CONCLUSIONS

This paper proposed a novel multi-user detector for signals having different symbol rates. The proposed scheme successively detects the signals based on band limitation and replica generation using the soft-decision output from channel decoders. Simulation results show that the proposed detector can effectively detect signals having different symbol rates. In addition, it was shown that the BER performance of the proposed method for a narrow-band signal approaches that of the MLSE-based multi-user detector when the symbol rate ratio of the wide-band signal to the narrow-band signal becomes large. These results show that the proposed method exhibits excellent signal detection performance with a low complexity level.

REFERENCES

[1] P. Monsen, "MMSE equalization of interference on fading diversity channels," *IEEE Trans. Commun.*, vol. 32, no. 1, pp. 5–12, 1973.

[2] J. H. Winters, "Optimum combining in digital mobile radio with cochannel interference," *IEEE J. Select. Areas Commun.*, vol. 2, no. 4, pp. 538–539, 1984.

[3] H. Suzuki, "Signal transmission characteristics of diversity reception with least-squares combining –Relationship between desired signal combining and interference canceling–," *Trans. IEICE*, vol. 75–B–II, no. 8, pp. 524–534, 1992.

[4] K. Maeda, T. Asai and H. Yoshino, "Interference Canceller for Signals with Different Transmission Parameters," *WNCG wireless networking symposium*, no. 3–2–3, Oct. 2004.

[5] L. R. Bahl, J. Cocke, F. Jelinek and J. Raviv, "Optimal Decoding of Linear Codes for Minimizing Symbol Error Rate," *IEEE Trans. Inform. Theory*, vol. 20, pp. 284–287. Mar. 1974.

[6] M. Tüchler, A. C. Singer and R. Koetter, "Minimum Mean Squared Error Equalization Using A Priori Information," *IEEE Trans. Signal Processing*, vol. 50, no. 3, pp. 673–683, Mar. 2002.