FULL-WAVE MODAL ANALYSIS OF A RIGHT/LEFT-HANDED CORRUGATED RECTANGULAR WAVEGUIDE

Islam A. Eshrah, Ahmed A. Kishk, Alexander B. Yakovlev, and Allen W. Glisson

Center of Applied Electromagnetic Systems Research,
Department of Electrical Engineering, University of Mississippi,
University, MS 38677, USA, e-mail: ieshrah@olemiss.edu

ABSTRACT

A new application for corrugated rectangular waveguides as left-handed meta-material transmission lines is presented. Dielectric filled corrugations serve as a series capacitive surface that overcomes the natural series inductance of the waveguide. Operating the waveguide below the cutoff of the dominant mode turns the shunt capacitance into shunt inductance, and thus within the frequency range where the corrugations offer capacitive impedance, backward waves are sustained. The full-wave solution for the structure is found using the method of moments incorporating Floquet's theorem, where the dispersion characteristics and the modal field distribution are determined. An equivalent circuit model for the waveguide was constructed and subsequently used to predict the propagation constant with a very good accuracy as compared to the full-wave solution. Results are compared to those obtained using a finite-element commercial software (HFSS) and exhibited very good agreement.

INTRODUCTION

With the variety of applications of meta-material transmission lines [1], such as compact microwave devices, novel radiating elements, miniaturized resonators, and others, different realizations were proposed for such structures using microstrip lines [2], finlines [3], and waveguides [4]–[6].

In this work, another realization for meta-material guided-wave structures is proposed using rectangular waveguides with dielectric-filled corrugations and operated below the cutoff of the waveguide dominant mode. The corrugated surface acts as a series capacitive surface which, in the presence of the inherent shunt inductance of the evanescent TE dominant mode, creates the suitable environment for backward waves to propagate. This is in contrast to their traditional use with corrugated horn antennas where they act as high-impedance surface to support hybrid modes.

The corrugated waveguide is analyzed using two approaches: the first approach is based on the rigorous full-wave solution using Galerkin's projection technique upon applying Floquet's theorem to reduce the spatially periodic problem to its spectral analog, where a discrete spectrum of modes with corresponding propagation constants is determined. The second approach involves the development of an equivalent circuit model for the unit cell, then applying the Bloch-Floquet theorem to determine the propagation constant in the periodically cascaded cells. The results obtained from both approaches are compared against those obtained using the FEM-based commercial software, Ansoft High Frequency Structure Simulator (HFSS) [7], and exhibit very good agreement.

SPECTRAL ANALYSIS

Invoking the equivalence principle, the corrugated waveguide problem shown in Fig. 1(a) may be solved by first short circuiting the corrugations and introducing unknown equivalent magnetic currents on waveguide/corrugation interface. The fields scattered by the magnetic currents are then determined using the pertinent dyadic Green's function for the waveguide and the corrugations. The use of Floquet's theorem reduces the problem of the spatially periodic magnetic currents to a spectral problem with the unknown current being only that of one reference corrugation. Enforcing the continuity of the tangential electric and magnetic fields on the interface of the reference corrugation yields an integral equation that can be cast in the operator form

$$\mathcal{L}\mathbf{M} = 0 \tag{1}$$

where $\mathbf{M}$ is the unknown magnetic current on the reference corrugation and $\mathcal{L} \equiv \mathcal{L}(k_{z0})$ is an operator-function of a spectral parameter k_{z0} and, in general, is a function of the geometrical and material parameters of the structure.

Using entire domain basis functions, Galerkin's projection technique may be applied to reduce (1) to the matrix form

$$\mathbf{YV} = \mathbf{0} \tag{2}$$

where $\mathbf{Y} = \mathbf{Y}^w - \mathbf{Y}^c$ is the difference between the waveguide and corrugation matrices and $\mathbf{V}$ is the unknown coefficients vector of the magnetic current. The propagation constant k_{z0} is determined as a solution of the dispersion equation $\det[\mathbf{Y}(k_{z0})] = 0$. The vector $\mathbf{V}$ is computed as the null space vector of $\mathbf{Y}$, from which the modal magnetic and electric fields may be obtained.

In the general case, where the corrugation length l is less than the waveguide width a, the expressions for the matrix elements and the field components are rather lengthy, and are thus not given here for brevity. In the special case of wall-to-wall corrugations, however, more compact expressions are obtained. Considering only one mode for the current expansion and one spatial harmonic results in the simple dispersion relation:

$$-\frac{\chi_{01}}{\jmath\omega\mu}\left[\frac{w}{p}\frac{\gamma_{10}^2}{\chi_{01}^2}\left(\frac{\sin(k_{z0}w/2)}{k_{z0}w/2}\right)^2\right]\coth(\chi_{01}b) = \frac{\Gamma_{10}}{\jmath\omega\mu}\coth(\Gamma_{10}d). \tag{3}$$

The dominant TE_{01}^x mode has the following field components

$$H_x(x,y,z) = -\jmath\frac{w}{p}\frac{E_0}{Z_{01}}\frac{k_{z0}}{\chi_{01}}\frac{\sin(k_{z0}w/2)}{k_{z0}w/2}\frac{\cosh(\chi_{01}y)}{\sinh(\chi_{01}b)}\sin(k_{x1}x)e^{-\jmath k_{z0}z} \tag{4a}$$

$$H_y(x,y,z) = \jmath\frac{w}{p}\frac{E_0}{Z_{01}}\frac{k_{x1}k_{z0}}{\gamma_{10}^2}\frac{\sin(k_{z0}w/2)}{k_{z0}w/2}\frac{\sinh(\chi_{01}y)}{\sinh(\chi_{01}b)}\cos(k_{x1}x)e^{-\jmath k_{z0}z} \tag{4b}$$

$$H_z(x,y,z) = \frac{w}{p}\frac{E_0}{Z_{01}}\frac{k_{x1}k_{z0}^2}{\chi_{01}\gamma_{10}^2}\frac{\sin(k_{z0}w/2)}{k_{z0}w/2}\frac{\cosh(\chi_{01}y)}{\sinh(\chi_{01}b)}\cos(k_{x1}x)e^{-\jmath k_{z0}z} \tag{4c}$$

$$E_x(x,y,z) = 0 \tag{5a}$$

$$E_y(x,y,z) = \jmath\frac{w}{p}E_0\frac{k_{z0}}{\chi_{01}}\frac{\sin(k_{z0}w/2)}{k_{z0}w/2}\frac{\cosh(\chi_{01}y)}{\sinh(\chi_{01}b)}\sin(k_{x1}x)e^{-\jmath k_{z0}z} \tag{5b}$$

$$E_z(x,y,z) = \frac{w}{p}E_0\frac{\sin(k_{z0}w/2)}{k_{z0}w/2}\frac{\sinh(\chi_{01}y)}{\sinh(\chi_{01}b)}\sin(k_{x1}x)e^{-\jmath k_{z0}z} \tag{5c}$$

where E_0 is the amplitude of the corrugation aperture electric field and the impedance Z_{01} is defined by

$$Z_{01} \equiv -\frac{E_{y01}^w}{H_{x01}^w} = \frac{-k_{z0}}{\omega\varepsilon}\left(\frac{k}{\gamma_{10}}\right)^2 = \frac{k_{z0}}{\omega\varepsilon}\frac{1}{1-(k_{x1}/k)^2}. \tag{6}$$

In (3) through (6), $\gamma_{ij} = \sqrt{k_{xi}^2 + k_{yj}^2 - k^2}$, $k_{xi} = i\pi/a$, $k_{yj} = j\pi/b$, $k = \omega\sqrt{\mu\varepsilon}$; $\Gamma_{ij} = \sqrt{k_{\zeta i}^2 + k_{\xi j}^2 - k_d^2}$, $k_{\zeta i} = i\pi/l$, $k_{\xi j} = j\pi/w$, $k_d = \omega\sqrt{\mu\varepsilon_d}$; and $\chi_{li} = \sqrt{k_{zl}^2 + k_{xi}^2 - k^2}$ with $k_{zl} = k_{z0} + 2l\pi/p$.

EQUIVALENT CIRCUIT MODEL

Viewing the corrugation as a short-circuited waveguide section, the equivalent circuit model of the unit cell can be obtained as shown in Fig. 1(b), where the parallel LC combination models the corrugation aperture and the transformer models the transition to the corrugation waveguide. The circuit parameters are obtained independent of the load (in this case the corrugation as a shorted waveguide) as outlined in [8]. The effective per-unit length parameters of the corrugated waveguide may be obtained using

$$C'_{eff} = C', \quad L'_{eff} = L' - \frac{j}{\omega p Y_{corr}} \tag{7}$$

where

$$L' = \mu\frac{Z_0}{\eta}, \quad C' = \varepsilon\frac{\eta}{Z_0}\left(1-(f_c/f)^2\right) \tag{8}$$

and $Z_0 = 2\eta(b/a)$. It is clear from (7) that C'_{eff} is negative below the cutoff frequency of the dominant TE_{10} mode of the non-corrugated waveguide, i.e. for $f < f_c = c/2a$. Within some frequency range $f_1 < f < f_2$, L_{eff} changes its sign when the capacitance offered by the corrugation exceeds L'. If these two frequency ranges overlap, then left-hand

(LH) propagation will be sustained. The conventional right-hand (RH) propagation will occur when L'_{eff} and C'_{eff} are positive.

Applying the Bloch-Floquet theorem, the propagation constant may be found as

$$k_{z0} = \frac{1}{p}\cos^{-1}\left(1 - \frac{\omega^2 p^2 L'_{eff} C'_{eff}}{2}\right) \approx \begin{cases} \omega\sqrt{L'_{eff}C'_{eff}}, & f > f_{\mathrm{RH}} \\ -\omega\sqrt{L'_{eff}C'_{eff}}, & f_1 < f < f_{\mathrm{LH}} \\ -j\omega\sqrt{|L'_{eff}C'_{eff}|}, & \text{elsewhere} \end{cases} \tag{9}$$

where $f_{\mathrm{RH}} = \max\{f_c, f_2\}$ and $f_{\mathrm{LH}} = \min\{f_c, f_2\}$. In (9) the first and second branches correspond to RH and LH propagation, respectively, and the third branch corresponds to evanescence occurring when the per-unit-length parameters have opposite signs.

RESULTS

To act as a capacitive immittance surface, the corrugations should have a depth $\lambda_d/4 < d < \lambda_d/2$, where λ_d is the corrugation waveguide wavelength. Fig. 2 depicts the dispersion diagram for a case where the corrugated waveguide has the following parameters: $a = 17$ mm, $b = 6.46$ mm, $l = 17$ mm, $w = 1.27$ mm, $d = 3.7$ mm, and $p = 1.5$ mm. The waveguide is air-filled, whereas the corrugations have $\varepsilon_{rd} = 10.2$. Four bands are distinguished in the figure for the dominant TE^x_{01} mode: a RH pass-band above the cutoff frequency f_c of the TE^z_{10} mode of the non-corrugated waveguide, a LH pass-band in the frequency range $f_1 < f < f_2$, two stop-bands in the ranges $f_2 < f < f_c$ and $f < f_1$ where the waves are evanescent. The curve in Fig. 2 was obtained by finding the zeroes of the complex function $f(k_{z0}) = \det[\mathbf{Y}(k_{z0})]$ using the secant method. The comparison with HFSS [7] exhibits an excellent agreement.

The waveguide characteristic impedance Z_{01} of the dominant mode is real and positive in the LH and RH propagation bands, and assumes a positive imaginary values (inductive) elsewhere, as shown in Fig. 2. This can be easily seen from (6) in the different frequency ranges: Above the cutoff frequency f_c of the RH propagation, k_{z0} is positive and real whereas γ^2_{10} is negative real, yielding a positive real value for Z_{01}. In the range $f_1 < f < f_2$, k_{z0} and γ^2_{10} are also real but with negative and positive signs, respectively, yielding a positive real value for Z_{01}. In the other frequency ranges, $f_2 < f < f_c$ and $f < f_1$, γ^2_{10} is positive and real, and k_{z0} is pure imaginary and negative number, and thus Z_{01} is inductive.

Fig. 2 also compares the values of the propagation constant and the characteristic impedance estimated using the equivalent circuit model to those obtained using the present theory. It can be seen that the circuit analysis succeeds in predicting the dispersion behavior of the structure with very good accuracy, except in the range where k_{z0} assumes relatively high values. This is expected since the validity of the circuit model was based on the assumption that the period is much less than the guided wavelength; a condition that is violated for high values of k_{z0}.

CONCLUSION

A composite right/left-handed waveguide was realized by loading its wall with dielectric-filled corrugations. The dispersion characteristics were determined using a full-wave modal approach as well as an approximate circuit analysis, and exhibited very good agreement. In addition, the results were verified using a commercial software.

The effect of the different design parameters on the left-hand propagation bandwidth was studied, and more in-depth understanding of the higher order modes of the structure was sought. For the analysis of finite sections of the corrugated waveguide integrated with other microwave components such as conventional waveguides, the constructed equivalent circuit for the unit cell was cascaded to model the corrugated waveguide section.

ACKNOWLEDGMENT

This work was partially supported by The Army Research Office under grant No. DAAD19-02-1-0074.

REFERENCES

[1] Anthony Lai, Christophe Caloz, and Tatsuo Itoh, "Composite right/left-handed transmission line metamaterials," *IEEE Microwave Magazine*, vol. 5, no. 3, pp. 34–50, Sept. 2004.

[2] G. V. Eleftheriades, O. Siddiqui, and A. K. Iyer, "Transmission line models for negative refractive index media and associated implementations without excess resonators," *IEEE Microwave Wireless Compon. Lett.*, vol. 13, pp. 51–53, Feb. 2003.

[3] T. Decoopman, O. Vanbésien, and D. Lippens, "Demonstration of a backward wave in a single split ring resonator and wire loaded finline," *IEEE Microwave Wireless Compon. Lett.*, vol. 14, pp. 507–509, Nov. 2004.

[4] S. Hrabar, J. Bartolic, and Z. Sipus, "Waveguide miniaturization using uniaxial negative permeability metamaterial," *IEEE Trans. Antennas Propagat.*, vol. 53, no. 1, pp. 110–119, Jan. 2005.

[5] I. A. Eshrah, A. A. Kishk, A. B. Yakovlev, and A. W. Glisson, "Evanescent rectangular waveguide with corrugated walls: a composite right/left-handed metaguide," *IEEE MTT-S Int. Symp. Dig.*, 2005.

[6] I. A. Eshrah, A. A. Kishk, A. B. Yakovlev, and A. W. Glisson, "Modal analysis of corrugated rectangular waveguides supporting left-hand propagation," *IEEE AP-S Int. Symp. Dig.*, 2005.

[7] HFSS: High frequency structure simulator based on the finite element method, v. 9.2.1, Ansoft corporation, 2004.

[8] I. A. Eshrah, A. A. Kishk, A. B. Yakovlev, and A. W. Glisson, "Load-independent equivalent circuit model for transverse waveguide slots," in *Proc. IEEE AP-S Int. Symp.*, 2005, to appear.

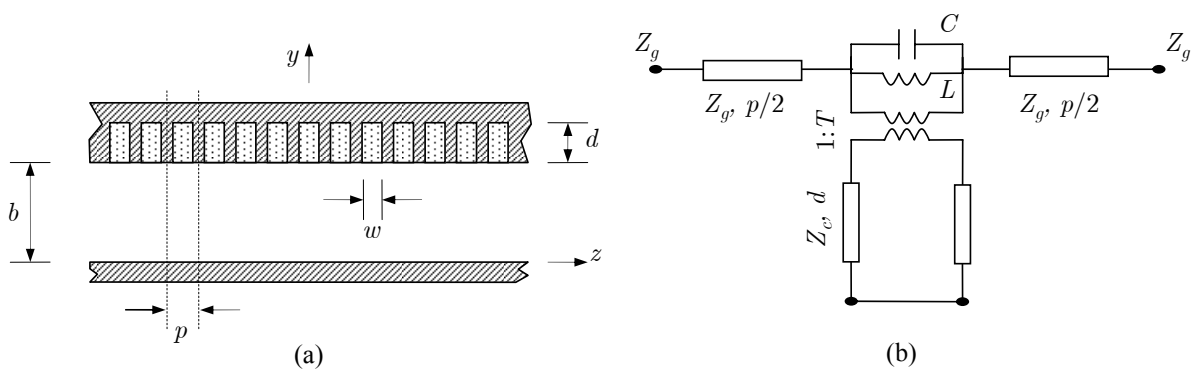

Fig. 1. Rectangular waveguide with dielectric-filled corrugations: (a) original geometry and (b) equivalent circuit model of a unit cell.

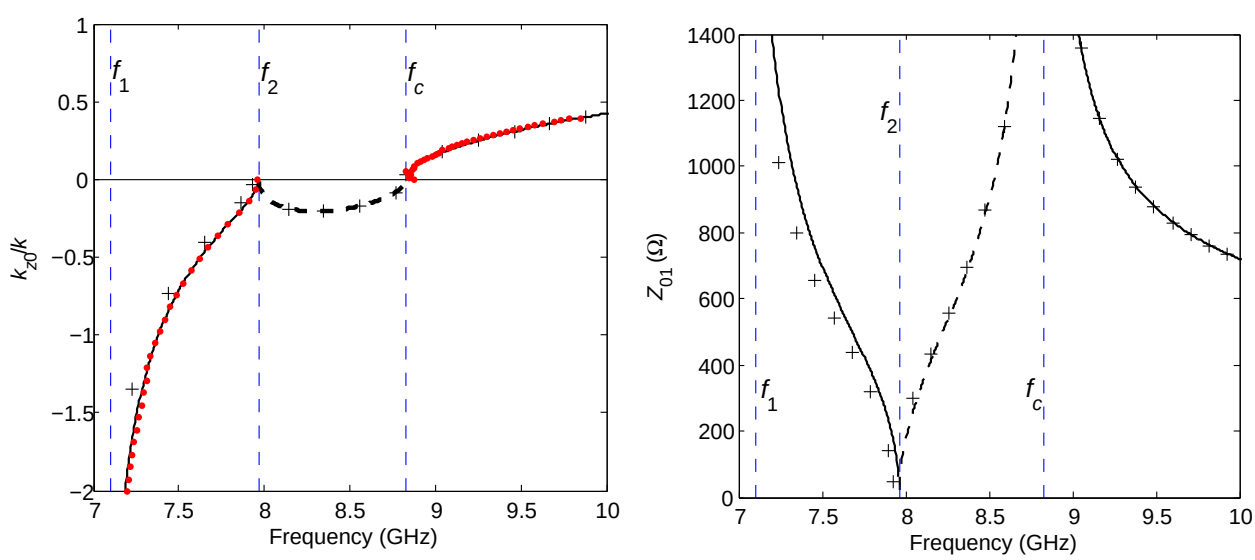

Fig. 2. Dispersion characteristics and characteristic impedance of the dominant TE^x_{01} mode. Lines: present theory (solid: real part and dashed: imaginary part), dots: HFSS, pluses: circuit model ($L = 6.788$ nH, $C = 47.711$ fF, and $T = 1.0$).