Transmission Line Model of Dual Patch Aperture Coupled Microstrip Antenna

Samik Chakraborty, Tathagata Chakraborty, Bhaskar Gupta and D. R. Poddar
Dept. of ETCE, Jadavpur University, Jadavpur, Kolkata 700 032
E-mail: chakrasamik@yahoo.com

ABSTRACT

Microstrip antennas have a number of useful properties, but one of the serious limitations of these antennas has been their narrow bandwidth characteristic. Efforts to improve the bandwidth usually result in reduction of radiation efficiency and consequently antenna gain. Moreover, its radiation pattern is normally hemispherical instead of being omni directional, suitable for wire less communication. A novel microsrip antenna is presented here, which is formed by using two aperture coupled rectangular patches fed back to back by a single feed line placed in between with a suitable stub in series. The configuration results in considerable enhancement of bandwidth (about 12% for <2:1 VSWR) without sacrificing the radiation efficiency together with an almost omni directional radiation pattern.

INTRODUCTION

An exploded view of an aperture coupled microstrip antenna [1] is shown in Fig. 1. It consists of a rectangular patch of dimensions a x b printed on a substrate of thickness h and dielectric constant ϵ_{ra}. The microstrip patch is fed by a microstrip line through an aperture or slot in the common ground plane as shown in the Fig1. The aperture is of dimensions L_a X W_a and centered at (X_o,Y_o).The width of the microstrip line is W and it is printed on a substrate described by thickness t and dielectric constant ϵ_{rf}. The characteristic impedance of the microstrip line is denoted by Z_{om} and that of the slot line corresponding to the coupling slot by Z_{os}. Coupling of the slot to the dominant mode [2] of the patch and the microstrip line occurs because the slot interrupts the longitudinal current flow in them.

The coupling slot is nearly centered with respect to the patch where the magnetic field of the patch is maximum. This is done on purpose to enhance coupling [3] between the magnetic field of the patch and the equivalent magnetic current near the slot. The coupling amplitude can be determined [4] from the following expression

$$\text{Coupling} \cong \iiint_v \vec{M}.\vec{H}\, dv \cong \sin\left(\frac{\pi X_0}{L_a}\right)$$

where x_0 is the offset of the slot from the patch edge.

THEORY FOR ANALYSIS

Simplified equivalent circuit of dual patch aperture-coupled microstrip antenna is shown in Figs. 2 and 3. In this equivalent circuit, the patch is characterized by admittance Y_{patch} and the aperture by an admittance Y_{ap}. The patch admittance is determined at the centre of the slots.

In this feed configuration the patch antenna appears in series with the feed because of slot coupling. The nonresonant slot is represented as an inductor in series with the R-L-C network representing the patch resonator. The two patches on the both sides of the microstrip feed line are acting as parallel loads. The open circuited microstrip stub of length L_s can be replaced by a shunt capacitor C_s such that $1/\omega C_s = Z_o \mathrm{Cot}(\beta L_s)$, where Z_o is the characteristic impedance, and β is the propagation constant of the microstrip feed line. As the patches are exited by the same feed line and we took all other microstrip parameters (antenna substrates height and dielectric constant) same, they have the same frequency of operation. In this case patch parameters are exactly the same for the both patches. So we take $n_2 = n_2'$, $Y_{patch} = Y_{patch}'$, $n_1 = n_1'$, 1 = 1' and $Y_{ap} = Y_{ap}'$. The transmission line model for one of the two aperture coupled patches is shown below.

ACKNOWLEDGEMENT

The authors would like to acknowledge Centre for Mobile Computing and Communication, Jadavpur University, Kolkata-32, India for financial assistantship to carry out the research work.

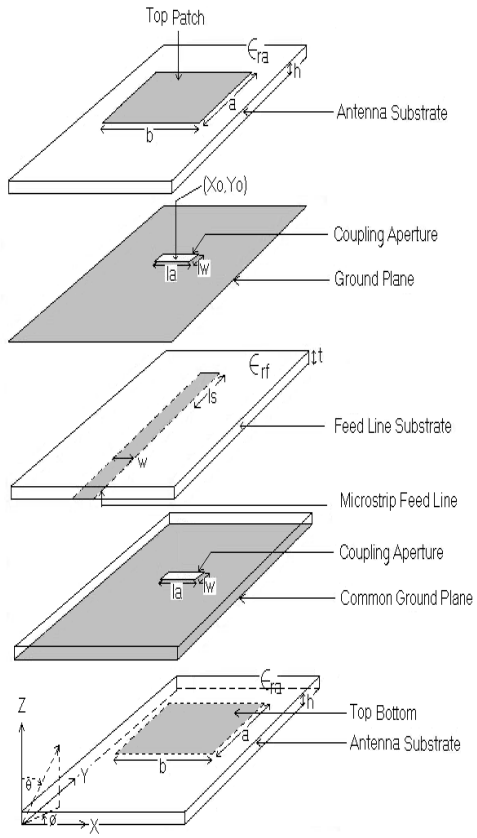

Fig 1. Expanded view of dual patch aperture coupled microstrip antenna

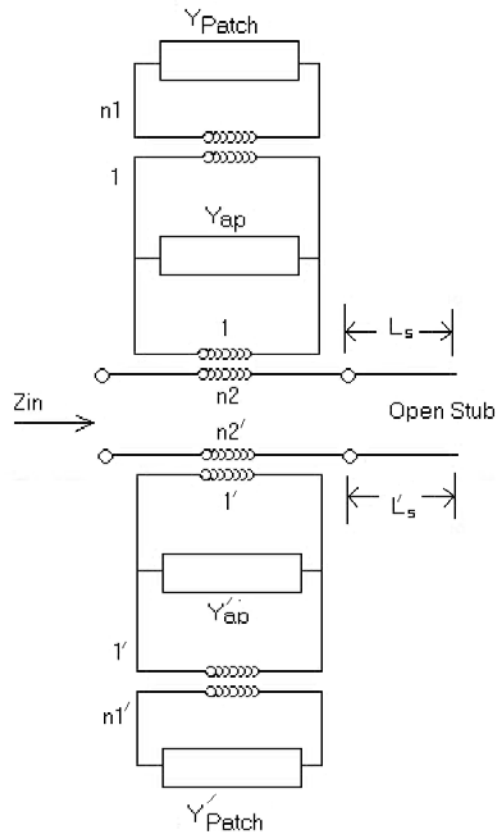

Fig 2. Simplified equivalent circuit of dual patch aperture coupled microstrip antenna

The coupling of the patch to the aperture is described by an impedance transformer of turns ratio $n_1 = L_a/b$. Z_1 and Z_2 are the impedances looking toward the left and right of the aperture.

With reference to Fig.2,

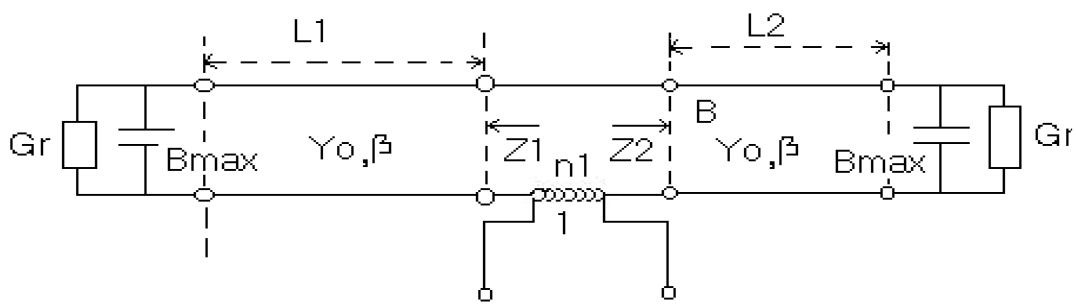

Fig 3. Transmission line equivalent circuit of a rectangular microstrip patch feed by a slot in the ground plane

$Z_{patch} = Z_1 + Z_2 = 1/Y_1 + 2/Y_2$

$Y_1 = Y_o(((G_r + jB_{open}) + jY_o \tan(\beta L_1))/(Y_o + j(G_r + jB_{open}) \tan(\beta L_1))$

$L_1 = X_o$

$Y_2 = Y_o(((G_r + jB_{open}) + jY_o \tan(\beta L_2))/(Y_o + j(G_r + jB_{open}) \tan(\beta L_2))$

$L_2 = a - L_1$

Here (Y_o, β) characterize the rectangular patch antenna as a microstrip line of width b and ($G_r + jB_{open}$) is the edge admittance of the patch. The value of Y_{ap} can be obtained from the transmission line model of a slot and is given by

$Y_{ap} = -j2Y_{os} \cot(\beta_s L_a/2)$

A transformer of turns ratio n_2, used to describe the coupling of the patch to the microstrip feed line is modeled from the discontinuity ΔV in modal voltage of the feed microstrip line, that is

$n_2 = \Delta V/V_o$.where V_o is the slot voltage.

Thus $N_2 = ((J_o (\beta_s.W/2) J_o(\beta_m.W_a/2)) / (\beta_s^2 \beta_m^2))((\beta_m^2 .k_2.\epsilon_{rf} / (k_2.\epsilon_{rf}.\cos(k_1).h - k_1.\sin(k_1).h) + (\beta_m^2 .k_1/(k_1.\cos(k_1h). + k_2.\sin (k_1.h)))$

where $J_o(.)$ is the zeroth order Bessel function and

$k_1 = k_o(| \epsilon_{rf} - \epsilon_{res} - \epsilon_{rem} |)^{1/2}$

$k_2 = k_o(| \epsilon_{rf} + \epsilon_{rem} - 1|)^{1/2}$

$\beta_s = k_o \sqrt{\epsilon_{res}}$ and $\beta_m = k_o \sqrt{\epsilon_{rem}}$

Here (W, ϵ_{rem}, β_m, Z_{om}) are microstrip line parameters, and (W_a, ϵ_{res}, β_s, Y_{os}) are the corresponding slot line parameters. Input impedance at the centre of the slot due to one aperture coupled patch is given by

$Z_{in1} = n_2^2/ (n_1^2 Y_{patch} + Y_{ap})$

As the other aperture-coupled microstrip patch on the opposite side of the ground plane has the exactly same circuit parameters, input load on the feed line is given by

$Z_{in2} = n_2^2/ (n_1^2 Y_{patch} + Y_{ap})$

Thus the total input load on the microstrip line is given by

$Z_{in} = n_2^2/ (2. (n_1^2 Y_{patch} + Y_{ap}))$

Taking into account the impedance of the microstrip open circuited stub of length L_s, the input impedance of the dual patch aperture-coupled microstrip patch antenna at the centre of the slot [5] is finally given by

$Z_{in} = n_2^2/ (2. (n_1^2 Y_{patch} + Y_{ap})) - jZ_{om} \cot(\beta_m L_s)$

Setting $n_1^2 B_{patch} + B_{ap} = 0$ yields the following condition for resonance :

$B_{patch} = -B_{ap}/ n_1^2 \approx 4b^2 / Z_{os}.\beta_s.L_a^3$

The expressions for the characteristic impedance and guide wavelength of a slot line on a substrate of low ϵ_r have been obtained [6] by curve-fitting of the numerical results obtained using Galerkin's method in the Fourier transform domain. These expressions are

for $0.075 \leq W/\lambda_o \leq 1.0$ and $2.22 \leq \epsilon_r \leq 3.8$

$\lambda_s/\lambda_o = 1.194 - 0.24 \ln\epsilon_r - ((0.62\, \epsilon_r^{0.835} (W/\lambda_o)^{0.48})/(1.344+W/h)) - 0.0617[1.91 - (\epsilon_r+2)/ \epsilon_r]\ln(h/\lambda_o)$

average error=0.69% , max error = - 2.6 %

(evaluated at two points, for $W/\lambda_o > 0.8$)

and $Z_{os} = 133+10.34(\epsilon_r-1.8)^2 +2.87(2.96+(\epsilon_r-1.582)^2).((W_a/h+2.32\epsilon r-0.56)((32.5-6.67\epsilon_r) (100h/\lambda_o)^2-1))^{1/2} - (684.45h/\lambda_o)(\epsilon_r-1.35)^2+13.23((\epsilon_r-1.722) W_a/\lambda_o)^2$

average error = 1.9 %, | max error | = 5.4%

(evaluated at three points, for $W/\lambda_o > 0.8$)

SIMULATION RESULTS

Investigations have been carried out through computer simulation using the Finite Elements based software IE3D (Zeland Corp., USA) at a frequency band centered around 18 GHz for dual patch aperture coupled rectangular microstrip radiators designed according to the transmission line model developed.

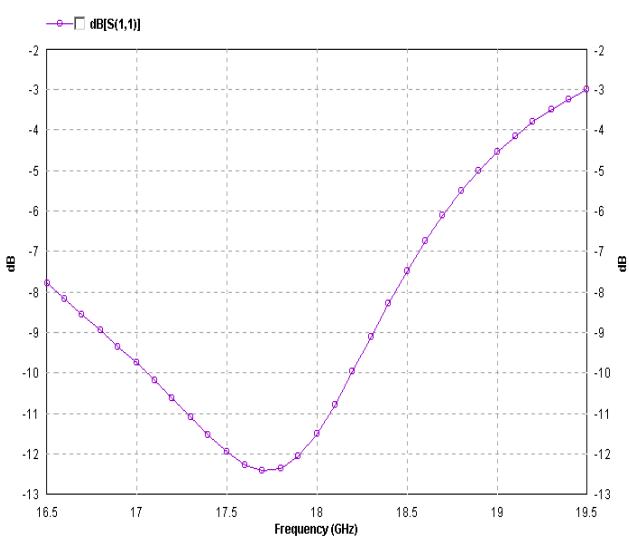

Fig 4. Return loss plot of dual patch aperture coupled microstrip antenna

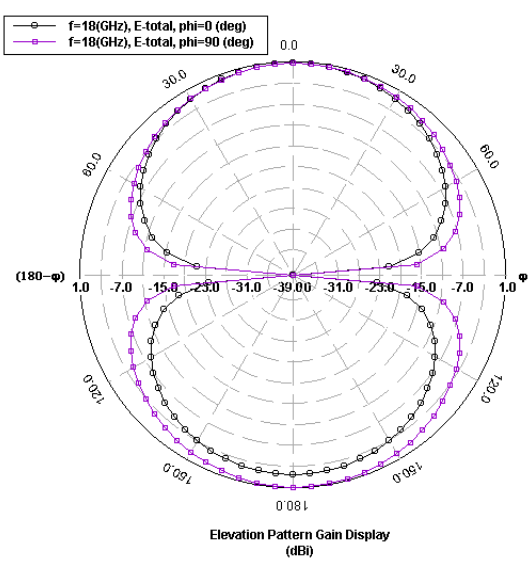

Fig 5. Radiation Pattern for dual patch aperture coupled microstrip antenna

Here both the antenna substrates is of thickness 1/16 inch (=1.5875 mm) and ϵ_r=2.4 and corresponding resonant patch length and width are 3.70 mm and 5.60mm respectively. The feed substrate is 1/32 inch (=0.79375 mm) thick with ϵ_r=2.4.

For a 25 ohm feed line the aperture parameters according to our design are chosen as L_a = 5.234mm, Ls = 2.79mm and W_a = 2.98mm.

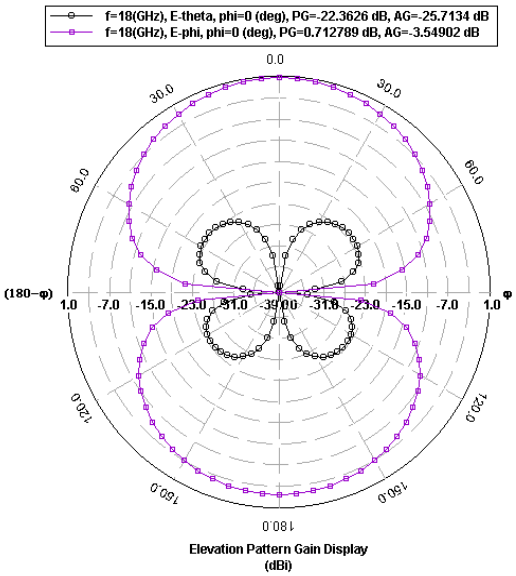

Fig 6. Co and cross field radiation pattern for dual patch aperture coupled microstrip antenna at phi = 0^0

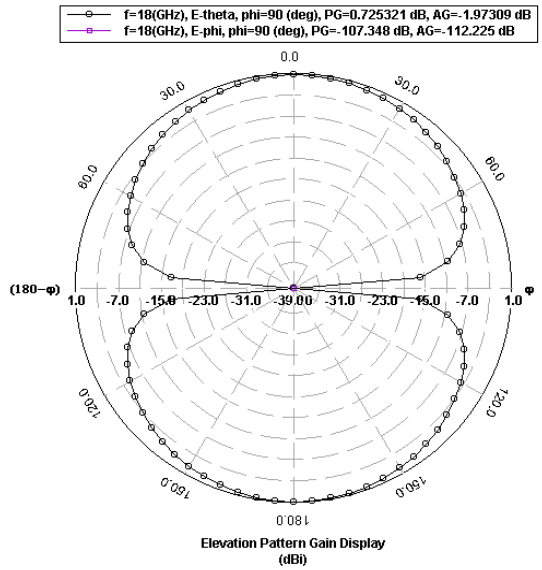

Fig 7. Co and cross field radiation pattern for dual patch aperture coupled microstrip antenna at phi = 90^0

Simulation results for return loss are shown in Fig. 4. The simulated values indicate good impedance matching at the design frequency (simulation shows a slight shift in resonance frequency as finite substrate effect was not taken into account) and the 2:1 V.S.W.R. bandwidth extending nearly from 16.9 GHz to 18.2 GHz.

The most interesting investigation is the radiation pattern, as shown in Figs. 5 to **7** which show almost omni directional pattern coverage (barring the unavoidable end fire null) with a greater than 30 dB on-axis cross polar discrimination.

CONCLUSION

Today's world goes to more and more digitized wire less communication like mobile, blue-tooth or radio telephony everyone's need is to multimedia data transfer with high speed and any one have to obtain a wide band width and omni-directional pattern for the antenna used. The dual patch aperture coupled microstrip antenna can fulfill all these criteria unlike other printed radiators.

REFERENCES

[1] Garg R, Bhartia P, Bahl I and Ittipiboon A, *Microstrip Antenna Hand Book* (Artech House, Boston) 2001.

[2] Pozar D M, A Review of Bandwidth Enhancement Techniques for Microstrip Antennas in *Microstrip Antennas, The Analysis and Design of Microstrip Antenna and Arrays* ed. by *D.M. Pozar and D.H.Schaubert* (IEEE Press, New York) 1995, 57-166.

[3] Das B N, Joshi K K, Impedance of a Radiating Slot in the Ground Plane of a Microstrip Line, *IEEE Trans. Ant. and Propagat.*, **AP-30** (1982) 922-926.

[4] James J R, Hall P S (Eds), *Handbook of Microstrip Antenas* (Peter Peregrinus, London) 1989.

[5] Janaswamy R, Shaubert D H, Characteristic Impedance of A Wide Slotline on Low Permittivity Substrates, *IEEE Trans. Microwave Theory and Tech.*, **MTT 34** (1986) 900-902.

[6] Gupta K C, *Microstrip Lines and Slot Lines*, (Artech House, Norwood MA) 1996.