3rd URSI AT-AP-RASC, Gran Canaria, 29 May – 3 June 2022

30 GHz Low-phase Noise Regenerative Frequency Divider

Archita Hati(1), Marco Pomponio(1,2), Connor Humiston(1,2), John Lettang(1,2), and Craig Nelson(1)
(1) National Institute of Standards and Technology, 325 Broadway, Boulder, CO 80305, USA, e-mail: archita.hati@nist.gov; marco.pomponio@nist.gov; connor.humiston@nist.gov; john.lettang@nist.gov; craig.nelson@nist.gov
(2) University of Colorado, Boulder, Colorado 80309, USA

Frequency dividers are important building blocks for frequency synthesis. Most frequency divider designs utilize digital technology and suffer from relatively high-phase noise. The analog regenerative frequency divider (RFD) typically outperforms the digital designs in terms of phase noise [1]-[5].
This paper describes the design and implementation of a low-phase noise 30 GHz divide-by-3 RFD. The schematic diagram of the proposed divide-by-3 is shown in Fig. 1. It comprises a conventional Miller regenerative frequency divide-by-2 circuit with an additional regenerative frequency mixing path. The output frequency ν_1 of the divide-by-2 is mixed with the input frequency ν_3 at Mixer1. The difference frequency ($\nu_2 = \nu_3 - \nu_1$) is selected using a bandpass filter and becomes the input for the regenerative divide-by-2 divider.

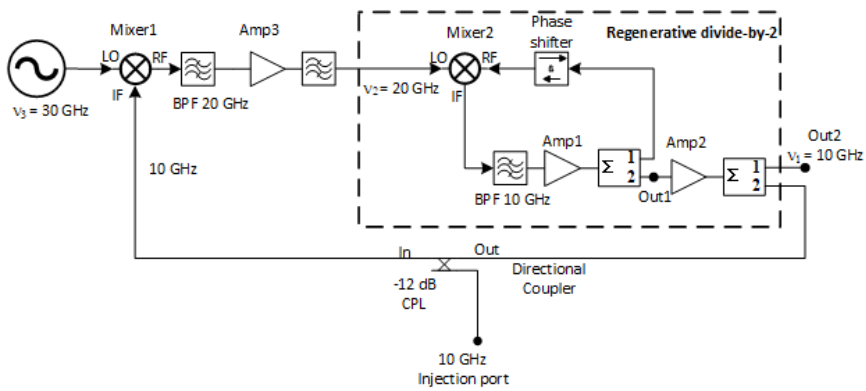

Figure 1. Schematic diagram of a 30 GHz regenerative frequency divider (÷3).

For the divider to operate, the Barkhausen criteria need to be satisfied. It states that the loop gain must be unity and that the total phase shift around the loop must be an integer multiple of 2π. Unlike a single-loop conventional Miller regenerative divider, which is self-starting with thermal noise, our two-loop design requires an auxiliary signal to start the oscillation.

With the initial prototype, we achieved output referred phase noise, $\mathcal{L}$(100 Hz) = -140 dBc/Hz at 10 GHz, and frequency stability of 1×10^{-15} at a 1 second averaging time.

1. R. L. Miller, "Fractional-Frequency Generators Utilizing Regenerative Modulation," *Proceedings of the IRE*, vol. **27**, no. 7, pp. 446–457, Jul. 1939, doi: 10.1109/JRPROC.1939.228513.

2. E. Rubiola, M. Olivier, and J. Groslambert, "Phase noise in the regenerative frequency dividers," *IEEE Transactions on Instrumentation and Measurement*, vol. **41**, no. 3, pp. 353–360, Jun. 1992, doi: 10.1109/19.153328.

3. A. S. Gupta, J. F. G. Nava, and F. L. Walls, "A novel low noise regenerative divide-by-four circuit," in *Proceedings of the 2002 IEEE International Frequency Control Symposium and PDA Exhibition* (Cat. No.**02CH37234**), New Orleans, LA, USA, pp. 680–684. doi: 10.1109/FREQ.2002.1075967.

4. A. Hati, C. W. Nelson, C. Barnes, D. Lirette, J. A. Desalvo, and D. A. Howe, "Ultra-low-noise regenerative frequency divider," *IEEE Transactions on Ultrasonics, Ferroelectrics, and Frequency Control*, vol. **59**, no. 11, pp. 2596–2598, Nov. 2012, doi: 10.1109/TUFFC.2012.2495.

5. A. Hati *et al.*, "State-of-the-art RF signal generation from optical frequency division," *IEEE Transactions on Ultrasonics, Ferroelectrics, and Frequency Control*, vol. **60**, no. 9, pp. 1796–1803, Sep. 2013, doi: 10.1109/TUFFC.2013.2765.