3rd URSI AT-AP-RASC, Gran Canaria, 29 May – 3 June 2022

High linearity receiver unit for LOFAR 2.0

P. Krüger*(1), J. Monari(2), F. Perini(2), G. Schoonderbeek(1) and S. Damstra(1),
(1) ASTRON, Netherlands Institute for Radio Astronomy, the Netherlands
(2) INAF-IRA, Istituto di Radioastronomia, Italy

Abstract

A new receiver unit (RCU2) has been developed for the LOFAR 2.0 upgrade to simultaneously digitise all antennas. RCU2 has improved linearity performance and has a larger dynamic range, but it has a similar power consumption and noise performance. Monitoring points were also added for improved self testing.

1 Introduction

LOFAR currently consists of about 8000 dual-polarised antennas, 5000 low-band antennas (LBAs) and 3000 high-band antenna tiles (HBAs), distributed over 52 stations in Europe. These 16000 signals are connected to almost 6000 receiver units (RCUs), each with three inputs. However, the current RCU can only digitise one signal, so that only a third of all antennas can be used at any time [1].

A new receiver unit (RCU2) has been developed for the LOFAR 2.0 upgrade which is able to digitise all three antenna inputs simultaneously. This will not only increases LOFAR's sensitivity, but also make simultaneous low-band and high-band observations possible [2].

2 Requirements

The radio frequency (RF) performance and power consumption of RCU2 need to be similar to the current RCU but with low cross-talk between the inputs and with much better linearity. The enhanced linearity will improve LOFARs capability to observe during strong radio frequency interference (RFI), for example below 30 MHz and above 180 MHz in the presence of strong AM and DAB signals (see Figure 1).

Table 1 gives a summary of the main RCU2 specifications [4]. The noise figure and maximum input tone requirements together define the required dynamic range. For example in the high band, the noise figure of 9 dB means an equivalent input noise power of -106 dBm/MHz. For a 60 MHz bandwidth, the maximum input tone requirement (-21 dBm) then implies a dynamic range of 67 dB. Note that when RCU2 is connected to an antenna, the sky noise is at least 10 dB higher than the RCU2 noise level, so that RCU2 contributes less than 10% to the system noise.

Table 1. Summary of the main RCU2 specifications [4]. Italics indicate new or more stringent specifications w.r.t. the current RCU. Where bands differ, specifications are given for the 10-80 MHz and 110-170 MHz bands.

Parameter	Unit	RCU2L	RCU2H
Frequency ranges	MHz	10-80, 30-80	*110-170*, 110-190, 170-230, 210-140
Noise Figure	dB	<10	<9
Correlated spurious signals (w.r.t. RCU noise)	dB	*-45*	*-50*
Max input tone	dBm	*-23*	*-21*
Channel Coupling	dB	*<-45*	
Out-of-band suppression	dBc	<-80	
Power per input	W	2.9	
Input reflection (75Ω)	dB	<-13	
Output interface		*JESD204b*	
Control interface		I2C bus	

The most stringent requirement RCU2 needs to comply to is that any spurious signals that are coherent (i.e. correlated) between RCU2s should be 50 dB below the RCU2 noise level. In the high band, a noise figure of 9 dB implies a maximum spurious signal level of -146 dBm across a 10MHz bandwidth. This ensures that LOFAR's sensitivity will not be limited by these spurious signals for deep observations. This requirement also determines the linearity, as non-linear products generated by RFI are coherent between the receivers in the LOFAR core, because they receive the same (coherent) RFI. A reference RFI spectrum is defined [4] for which non-linear products should comply to the spurious signal level. For example, to ensure that third-order intermodulation levels of a DAB signal at -38 dBm comply, an input third-order intercept point (IIP3) of 16 dBm or equivalently, a spurious free dynamic range (SFDR) of 108 dBc, is required.

3 RF Chain

The current RCUs have two LBA inputs with an input switch to connect one of them to the low-band RF chain. The third input is an HBA input connected to the high-band RF chain. Before the digitiser, another switch is used so

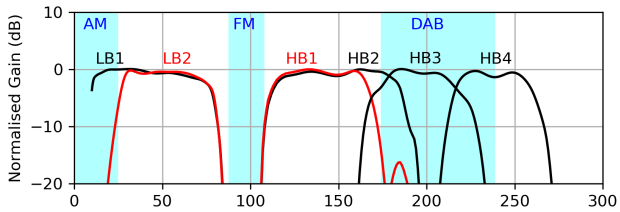

Figure 1. Frequency response of RCU2L and RCU2H bands. The red curves show the two 'low' RFI bands. The shaded regions indicate the strongest RFI frequency bands.

that either the high-band or low-band signal is digitised. LOFAR 2.0 will have two different receiver units. A low-band receiver unit (RCU2L) which has three identical low-band RF chains (see Figure 2) and a high-band receiver unit (RCU2H) which has three identical high-band RF chains.

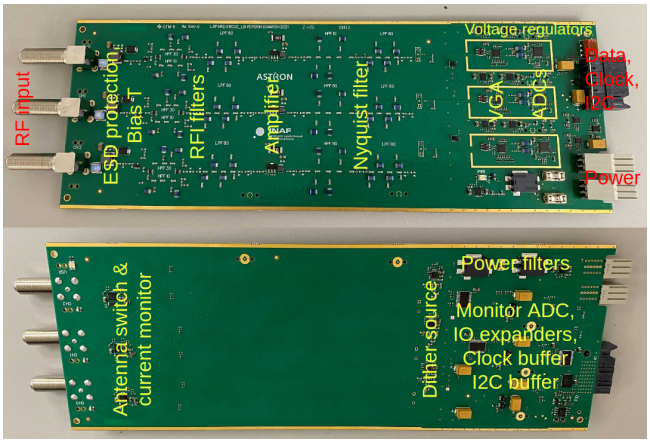

Figure 2. Low Band Receiver Unit (RCU2L) PCB

The RF chains have the same architecture as the current RCU consisting of a number of filter and amplification stages, followed by a direct sampling digitiser. Using a 200 MHz sampling clock, the 0-100 MHz, 100-200 MHz and 200-300 MHz frequency bands can be digitised directly (1st, 2nd and 3rd Nyquist bands) and, using a 160 MHz clock, the 160-240 MHz band can be digitised (3rd Nyquist band).

Figure 3 shows a block diagram of the RCU2L and RCU2H RF chains:

1. First the **input section** provides electrostatic discharge (ESD) protection, a bias tee to supply power to the antenna and impedance matching (from the 75 Ω input impedance to 50 Ω). In RCU2H the matching is done by the RFI filters for improved noise performance.

2. **Selectable RFI filters** are then used to suppress the strongest RFI as shown in Figure 1. RCU2L has 10-80 MHz and 30-80 MHz filters which suppress FM above 80 MHz and selectively suppress AM below 30 MHz or below 10 MHz. RCU2H suppresses FM below 110 MHz and either suppresses RFI above 174 MHz or above 270 MHz.

3. **Amplifiers** with the good linearity for the limited power available were selected. RCU2H requires one more amplification stage than RCU2L due to the larger loss of the filters and more stringent noise figure requirement.

4. **Selectable Nyquist filters** are used to select the Nyquist band being sampled. RCU2L has a 10-90 MHz filter and RCU2H has 110-190 MHz, 210-240 MHz and 170-230 MHz filters. Additional filters are also added after each successive amplification stage to suppress the noise and spurious signals generated by the amplifier in other Nyquist bands. The filters of the current RCU were re-used so that RCU2 has the same cut-off frequencies.

5. A **Variable gain amplifier** (VGA) is used to amplify the signal to the correct level for the analog-to-digital converter (ADC) i.e. ensuring that the sky noise is well above the ADC noise level while the peak RFI level is still within the limits of the ADC. The VGA also rejects common-mode signals so that the ADC is presented with a good differential signal which is needed by the ADC to achieve good linearity performance.

6. Lastly an **ADC** with a large dynamic range and a serial (JESD204b) output is used to digitise the signal.

3.1 Linearity

In order to meet the spurious signal (and derived linearity) requirement:

- All power and digital signals entering the PCB are filtered to minimise (correlated) noise being injected from the outside.

- Each RF chain has its own voltage regulators to further suppress correlated noise on the power supply.

- 14-bit ADCs are used with each ADC having its own (incoherent) dither signal. Without dithering it was found that the noise of the ADCs are correlated and that the dynamic range of the ADC deteriorates for small signals that do not use the full ADC input range. For dithering, continuous wave (CW) tones with a different frequency is used for each channel. The dither frequencies are all in the FM band (90-110 MHz) which is not observed by LOFAR.

- High-linearity, low gain GaAs amplifiers are used as the input linearity (e.g. IIP3) is in general proportional to the power consumption and inversely proportional to the gain [3].

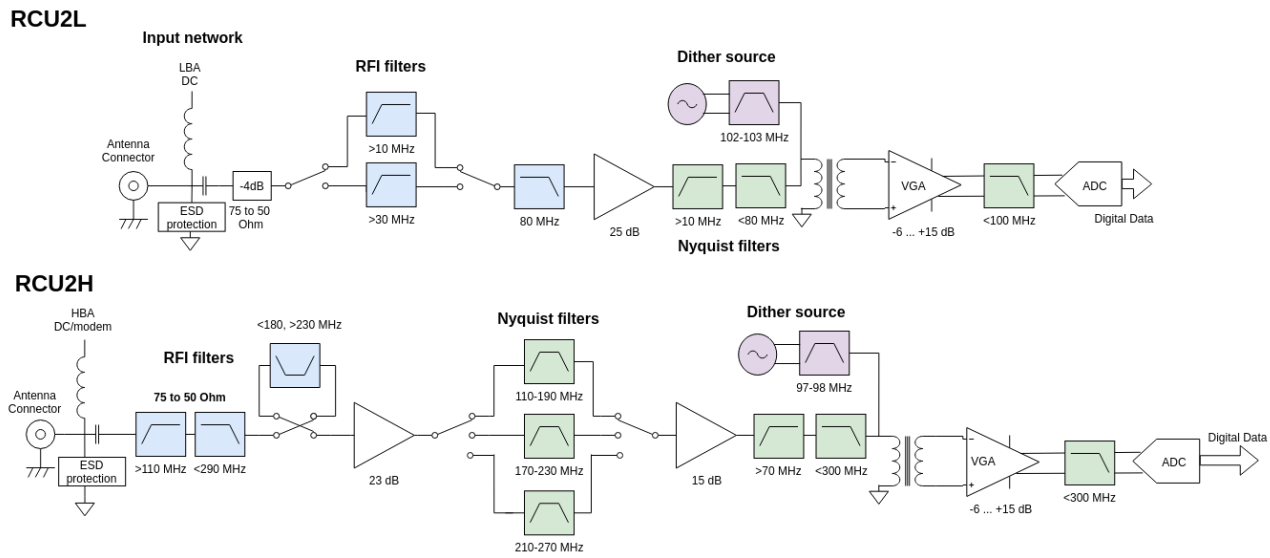

Figure 3. RF block diagram of RCU2L and RCU2H

- A selectable DAB filter needed to be added because in the case of the strong DAB a SFDR of 108 dBc would be required without the filter and the 14-bit ADC can only achieve 90 dBc.

Figure 4 demonstrates the linearity of RCU2L. RFI are represented by two strong input tones (18.0 and 20.3 MHz). The 10-80 MHz band selected can be seen in the higher noise level. The two dithering tones (at 102 and 101.5 MHz for each ADC respectively) can be seen just below 100 MHz. No intermodulation products of the input tones are visible in the cross-correlation between the two channels. This means that any correlated intermodulation products are well below the noise level and that the signals are digitise with an accuracy better than 1 part per billion (90 dBc).

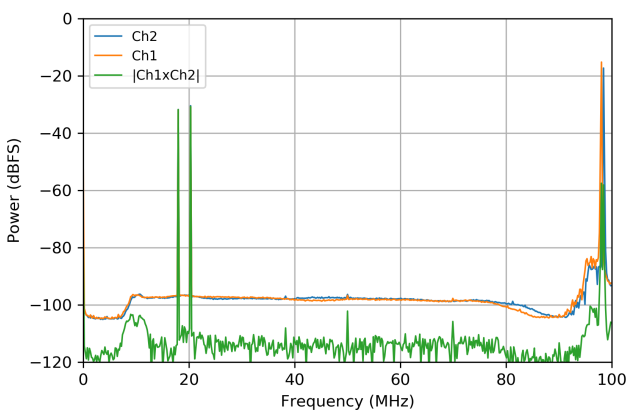

Figure 4. Measured RCU2L frequency spectrum (10-80 MHz band) for two channels connected to the same two CW tones.

4 Monitor and Control

The RCU2 is controlled via an I2C bus interface.

- A **monitor ADC** was added to RCU2 that make it possible to measure the RCU2 and antenna voltages; the current drawn by the antenna and the temperature of the RCU2 PCB. This make it possible to identify malfunctioning antennas or RCU2s.
- An **antenna power switch** is used to control the power to each antenna. The switch also automatically switches the power off if the current is above a given threshold, which provides short-circuit and overcurrent protection.
- **IO expanders** are used to control all switches (filter-band-select and antenna switches), enable or disable the power regulators (for the analog chains and ADCs respectively) and configure the ADC and dither sources.
- RCU2H also has a **microcontroller** than translates between the I2C interface and the HBA protocol used to control the HBA analog beamformers. Analog beamformer coefficients can be sent simultaneously to three HBATs connected to one RCU2, making it possible to update all HBAs in a station at once.

The monitoring points are also useful for production testing as it simplifies the production test setup by reducing the test points needed for hardware testing.

5 Conclusion

For the two mostly used LOFAR frequency bands (30-80 MHz and 110-170 MHz) RCU2L and RCU2H achieve

the RF specifications as listed in Table 1. The other frequency bands also achieve the RF specifications except that it violates the spurious signal (i.e. linearity) requirement for some worst-case RFI scenarios. RCU2L also complies to the power consumption requirement, but it was decided to allow RCU2H to have a 25% higher power consumption to achieve better linearity.

The monitoring points also make self testing easier and provide a mechanism to monitor the RCU2 and antenna health during operation.

References

[1] M.P. van Haarlem, et al., "LOFAR: The LOw-Frequency ARray" *A&A*, **556**, 2013, A2, doi: 10.1051/0004-6361/201220873.

[2] H. W. Edler, F. de Gasperin, and D. Rafferty, "Investigating ionospheric calibration for LOFAR 2.0 with simulated observations" *A&A*, **652**, 2021, A37, doi: 10.1051/0004-6361/202140465.

[3] P. Krüger, M. Ruiter, S.J. Wijnholds, M.A. Brentjes, "RFI mitigation strategies for next generation phased array radio telescopes" *URSI AP-RASC*, 2019, doi: 10.23919/URSIAP-RASC.2019.8738215.

[4] P. Krüger, B. Hut, G. Schoonderbeek "RCU2 Requirements Specification" LOFAR 2.0 internal document.