2nd URSI AT-RASC, Gran Canaria, 28 May – 1 June 2018

Single-Chip Gen2-Compliant UHF RFID Sensor Tags based on Novel Pseudo-BAP Mode

Riccardo Colella and Luca Catarinucci
(1) Department of Innovation Engineering, University of Salento, 73100 Lecce, Italy

Abstract

In this work a new design strategy for UHF RFID tags mounting RFID chips with embedded sensor is proposed. In particular, a novel functioning mode named "Pseudo-BAP" is introduced to solve the electromagnetic "filed-off" problem and to allow for a fully Gen2-compliant tag interrogating sequence to retrieve sensor data. In particular, a prototype of Pseudo-BAP-empowered Tag testing board has been designed, fabricated in FR4 and fully tested from the electromagnetic point of view. At the end, the proposed approach allows for the passive RFID-based temperature data collection from sensor-provided RFID chips by using standard RFID readers, and appreciable working distances as large as 1.75 m have been obtained with the considered low-sensitivity chip.

1. Introduction

The addition of sensing capabilities to UHF RFID tags has been a hot topic during the last few years, with plenty of interesting results in the literature [1]-[5]. Among other solutions the direct integration in the RFID chip has been also proved, and a number of chips are already on the market, such as, for instance, the SL900 [6] from Austria Microsystem and the EM4325 [7] from EM Microelectronics.

Although all of them allow for the passive identification through UHF RFID readers compliant with the standard EPC-Global Class 1 Generation 2 (from hereafter Gen2), to retrieve sensed data in passive mode it is necessary to perform a specific and non-standard writing-reading sequence. More specifically, the writing operation is a command for the chip to write the temperature data in a volatile memory location, which is then read through the next reading operation. Nevertheless, during the whole writing-reading sequence, the chip must remain powered so to guarantee the sensed data to be kept in memory until the reading sequence. Unfortunately, Gen2 standard does not guarantee the presence of the electromagnetic field between two consecutive commands, so that most of the RFID readers have an electromagnetic "field-off" issue which causes data losses in the volatile memory of the augmented chips. Consequently, two options are possible to exploit sensing functionalities of such chips. The former is based on the use of specific RFID readers provided with non-standard ad-hoc functions tailored for the specific augmented chip model, such as the CAEN Quark reader for the EM4325 chip, and the Thingmagic M6e reader for the SL900 chip. The latter, which has no limitation in the selected RFID reader, requires the tag working in Battery-Assisted Passive (BAP) mode, with obvious consequences.

A mean to avoid the use of batteries thus maintaining compactness and cost-effectiveness of the sensor tag is proposed in this paper and consists in implementing a novel so-called pseudo-BAP mode. In particular, the Pseudo-BAP mode is based on a proper fully Gen2-compliant tag interrogating sequence and on a slight hardware modification requiring only a few passive external —but in perspective chip-embeddable— lumped components. Tags designed following this strategy will be capable to passively transmit towards a whatever Gen2 Compliant RFID reader both ID code and measured data.

After the introduction of the design strategy and the some considerations about the antenna matching, a passive testing board composed of a circuitry implementing the pseudo-BAP mode and a tag mounting a sensor-provided UHF RFID chip is designed, realized and tested so to verify its appropriateness to guarantee RFID sensing, other than identification, even when using universally standardized reader commands.

2. Pseudo-Bap Mode

Typical UHF RFID chips embedding sensors provide two modalities to passively retrieve the data from the sensor through the RF interface. One of them exploits some custom functions at the reader side. The other one requires the sequential Gen2 reading and writing queries to specific memory locations. In both cases there are compatibility issues with most commercial RFID readers. Indeed, the first approach, even if simple and effective, is based on proprietary APIs (Application Programming Interfaces) and protocols. The second one is based on standard Gen2 commands, but suffers the electromagnetic "filed-off" problem: the temporary absence of radiated electromagnetic energy between consecutive Read and Write operations does not provide the chip with enough energy to keep in memory the measured value thus causing the permanent loss of data. To solve this problem, a different operating modality, called Pseudo-

BAP mode, is introduced. The basic idea is to exploit the capability of the chip to be insensitive to the "field-off" when working in BAP mode, even when a battery is not physically connected to the chip itself. In order to clarify how the method works, in Fig. 1 the circuital model enabling the Pseudo-BAP mode is presented. Without loss of generality, the commercial EM4325 chip, which embeds a temperature sensor with a resolution of 0.25°C [7], is considered. As can be observed, a diode is connected between the auxiliary pin AUX, that is the output of the internal harvester of the EM4325 chip, and the VBAT pin, which is the input pin typically dedicated to the external battery interconnection. Moreover, a tantalum storage capacitor is connected between the diode and the ground. The behavior of the chip depends on its status, BAP or passive, which can be set by a Write operation in a specific memory location.

Let's suppose the chip set to work in passive mode, so that the input VBAT is in high impedance state and the harvester output AUX is enabled. The tag can be hence normally read by the reader while the storage capacitor is charged through the pin AUX up to the voltage level VAUX minus the voltage drop across the diode (V_d) thanks to the current IC flowing through the diode. When a temperature measurement is needed, a sequence of standard Gen2 operations must be performed by the reader. The first of them is a Write command to turn the tag in BAP mode; then, according to the chip specifications, the two consecutive Write and Read commands allow to get the temperature value. A final Write command turns off the BAP mode to re-establish the default condition and to make the chip ready for another temperature reading.

It is worth mentioning that in BAP mode the chip is turned in low impedance state and the capacitor discharges through VBAT (current I_D of Fig.1) by delivering the buffered energy to the chip between Write and Read operations in correspondence of the "field-off" period. In this phase, the diode is needed to avoid the capacitor discharging also through the pin AUX.

In Fig. 2 the messages exchange necessary between reader and tag in the Pseudo-BAP mode is graphically represented; part of the energy stored in the capacitor is provided to the chip thus overcoming the problem of the absence of electromagnetic field between Write and Read operations.

3. Pseudo-BAP Tag Design

Based on the commercial EM4325 RFID chip, a Pseudo-BAP tag to be used as a testing board able to sense and transmit the environmental temperature measured by the integrated sensor towards any standard Gen2 Reader by exploiting the Pseudo-BAP mode is designed and realized. If needed, the board can be configured to work also in fully passive mode or in BAP mode. As can be observed in the layout reported in Fig. 3a, the board is composed of three main parts: a loop-fed folded antenna with meandered arms, a DC circuit enabling the Pseudo-BAP mode, and a metallic slot to host a CR2023 3V battery (in case of BAP mode operation). Note that the battery slot is a part of the central loop of the antenna and its presence is taken into account when optimizing the antenna impedance. This novel design strategy, making the devices quite compact, is possible since the RFID chip has a common RF-DC ground [7].

As clear from the same Fig. 3a, the circuit enabling the Pseudo BAP mode has been designed around the EM4325 chip according to the circuital model of Fig 1. In particular, a tantalum capacitor of 22 µF and a schottky diode model 1N5819, able to produce a voltage drop of only 0.15 V, have been used. A choke inductor has been also considered in order to separate the DC Pseudo-BAP circuit from the antenna and the rest of RF circuitry.

As for the target antenna impedance, it is worth mentioning that the chip shows three different sensitivities: -8.3 dBm (read) and -7 dBm (write) in passive mode, and -31 dBm in BAP mode. Moreover, its input impedance switches between 23.3-j145 Ω in passive mode and 7.4-j122 Ω in BAP mode. Since the first communication between tag and reader occurs in passive mode (see Fig. 2) and since the BAP sensitivity is extremely better than the passive one, the most reasonable design choice is to perform the conjugate matching between antenna and chip in passive mode, and then to verify whether or not the higher sensitivity of the chip in BAP mode compensates the reduced power transfer and

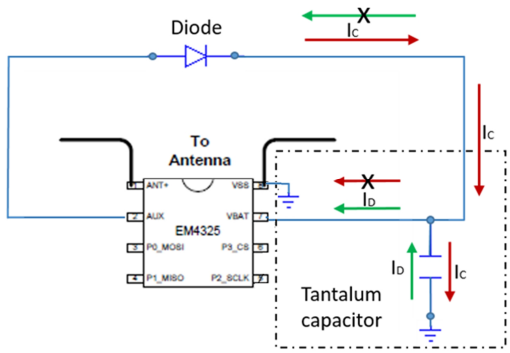

Figure 1. Pseudo-BAP circuitry for the EM4325 chip

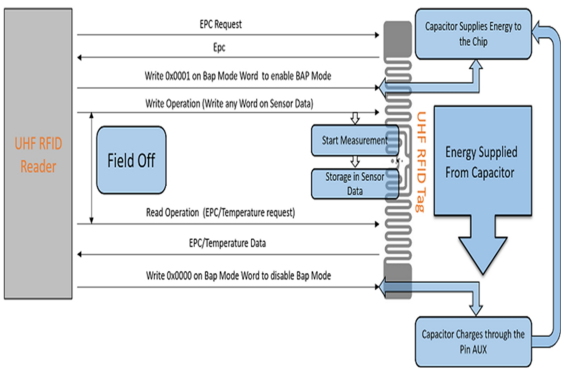

Figure 2. Pseudo-BAP mode message sequence between Reader and Tag.

TABLE I
OVERALL DIMENSIONS OF THE TAG ANTENNA OF THE TESTING BOARD

Parameter	
a=24.72 mm	g=32.86 mm
b=25.85 mm	h=15.00 mm
c=12.48 mm	i=13.00 mm
d=6.36 mm	l=7.45 mm
e=14.80 mm	m=4.22 mm
f=20.05 mm	

guarantees a working range at least equal to the one in passive mode.

Once designed, the whole board has been simulated in CST Microwave Studio and the values of the antenna parameters of Fig. 3a have been found (see Tab. I) so to obtain an input impedance at the RF port Z_{ant}=22.44+j146 Ω, which assures an appreciable conjugate matching with the chip in passive mode. The Pseudo-BAP testing board of Fig. 3b has been realized on a 85x45x1.6 mm^3 single-face FR4 substrate having dielectric constant 3.9 and loss tangent 0.02.

4. Validation Results

In the first test, the board has been tested in passive mode to verify its capability to work as a standard RFID tag and to transmit the ID code, and not the sensed temperature, toward the reader. The typical and expected dipole-like behavior has been measured in anechoic environment, along with a tag sensitivity of -10 dBm at 866 MHz corresponding to a maximum working distance of about 2.7 m. These not very appreciable values are not surprising at all, since the read sensitivity in passive mode of the EM4325 chip is only -8.3 dBm.

In the second test the testing board has been applied on a polystyrene support, kept in front of the reader at 60 cm of distance from the antenna, and then gradually moved away until reaching the maximum working distance. The

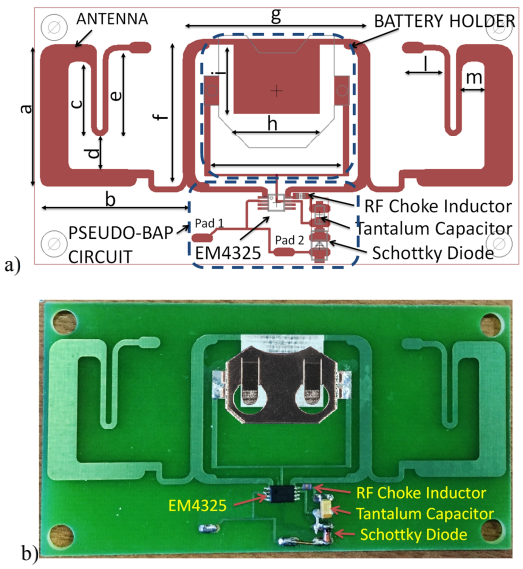

Figure 3. Pseudo-BAP testing board: (a) circuit and antenna, (b) Physical realization

test has been performed in four different working cases: 1) by reading the tag code in fully passive mode, 2) by writing a byte in the tag memory in fully passive mode, 3) by reading the tag code in BAP mode and 4) by writing a byte in the tag memory in BAP mode. It is worth underlining that the BAP mode has been obtained by properly setting the chip and by inserting a 3 V CR2032 battery into the dedicated battery holder (see Fig. 3b).

Obtained results highlight a maximum working distance of $d^{\text{Read}}_{\text{max},\,fully-passive} = 2.7\ m$ and $d^{Write}_{\text{max},\,fully-passive} = 2.4\ m$ for the cases 1) and 2), respectively, and a maximum working distance $d_{\text{max,BAP}} = 12.8\ m$ for both cases 3) and 4). It can be observed that the working distance of the tag in BAP mode is significantly greater than the other two, so that the appropriateness of the choice of tuning the antenna impedance to reach the conjugate matching with the tag in passive mode has been verified.

A practical test aiming at evaluating the capability of the method to provide the measured temperature values has been also performed. At this regard, the reader has been programmed to interrogate the sensor tag testing board according to the Gen2 command sequence reported in Fig. 2. The board has been placed at a fixed distance of 1 m from the reader antenna and a room temperature of 24.5 °C has been correctly measured. This simple test demonstrates that all the parts of the Pseudo-BAP mode algorithm at both tag and reader side work properly.

Finally, in order to estimate the performance of the device, two other tests have been performed. The former is related to the evaluation of the maximum tag working distance in Pseudo-BAP mode, the latter is referred to the evaluation of the on-board capacitor charging time when varying the working distance. Both tests are based on the preliminary evaluation of two important voltage thresholds characterizing the selected sensor-provided RFID chip. The first of them is the start-up threshold. It is the minimum voltage at the capacitor terminals making the internal circuitry of the chip active and, consequently, the ID code readable from the reader. Such a threshold resulted equal to 0.7 V. On the other hand, the boosting in sensitivity guaranteed by the BAP mode is obtained when the voltage at the capacitor terminals is higher than the BAP mode activation threshold, which has been experimentally verified to be 1.22 V, in very good agreement with the 1.25 V declared in the chip datasheet. Summarizing, when VBAT is below 0.7 V the chip doesn't work; when VBAT is between 0.7 V and 1.22 V the chip works but without any sensitivity boosting proper of the BAP mode, and finally when VBAT is higher than 1.22 V the tag works in BAP mode.

On such basis the first test has been carried out by moving the tag in a range of 0.6-3 m from the reader antenna (with the reader set to the maximum allowed power of 30 dBm) at steps of 0.3 m and by measuring the maximum achievable capacitor voltage for each step by using a multimeter. The test has been performed in two

different scenarios. In the first scenario the tag has been placed in the reader coverage area at the first measuring point (0.6 m), and then moved forward by maintaining for each measurement point the capacitor charge level accumulated at the previous point. Hence, the start-up phase is performed at the first point and maintained for all the next points. On the contrary, in the second case, for each measurement point the tag has been placed in the reader coverage area with the capacitor completely discharged and the start-up phase performed each time.

Results are summarized in the graph of Fig. 4 where the red dotted curve is referred to the first case where the chip is already activated for each measurement step (with start-up case in the figure), and the blue curve is referred to the second case where the chip is completely switched off before placing it in a measurement point (without start-up case in the figure). By comparing the curves of Fig. 4, it is possible to observe that the blue curve mainly fits the red one up to a distance of 1.5 m and a maximum capacitor voltage (VBAT) of about 2.8 V.

Due to the energy used by the chip for the start-up, a deviation between the two curves can be observed for distances larger than 1.50 m. In particular, at a distance of 1.90 m the available energy, for the blue curve case, is no longer sufficient to reach the start-up threshold and to charge the capacitor. On the contrary, for the red curve case, this condition occurs at about 2.7 m. Moreover, the graph clearly shows that the BAP mode activation threshold of 1.22V is reached at about 1.75 m and 2.4 m for the blue and red curves, respectively.

As already mentioned, a second test devoted to the performance evaluation of the novel Pseudo-BAP RFID tag has been performed. The test deals with the evaluation of the response time of the system in terms of minimum capacitor charging time allowing the temperature measurement when varying the tag-reader distance. More in detail, the time needed for charging the capacitor up to the BAP mode activation threshold of 1.22 V has been measured in the range between 0.7 m and 2.7 m at steps of 40 cm. In order to consider the worst case condition, the start-up of the tag has been performed for each test point. It is found that the minimum time needed to make

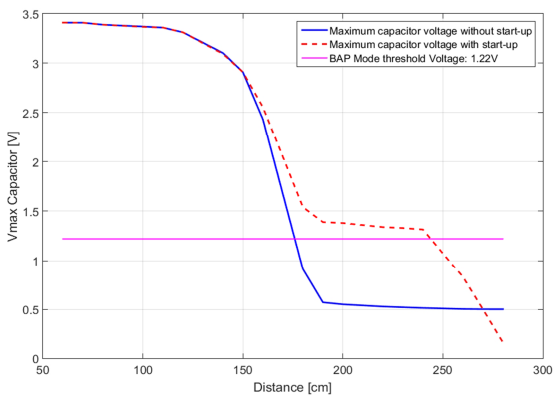

Figure 4. Maximum capacitor voltage with and without a 0.7 V start-up by varying the tag-reader distance.

the device capable of measuring the temperature by exploiting the Pseudo-BAP mode is varying between 0.8 s (at 0.7 m) and 10 s (at 1.5 m). As expected, at distances larger than 1.75 m, the internal circuitry of the chip is not fully activated and cannot start charging the capacitor.

5. Conclusions

Due to the field-off issue, retrieving sensor data from passive RFID tags provided with sensor-embedded RFID chip cannot be performed with Gen2 compliant RFID readers. In this work, a new design strategy based on the use of a well-defined Read-Write sequence and on a slight hardware modification requiring potentially chip-embeddable components. A tag designed by following this strategy has been realized and fully characterized. Obtained results are quite encouraging since the passive Gen2-compliant RFID-temperature sensing at distances as large as 1.75 m has been proved despite the low sensitivity of the used RFID chip. The development of chips with better sensitivity and integrating the pseudo-BAP circuitry would guarantee even better performance.

7. References

1. J. R. Smith, B. Jiang, S. Roy, M. Philipose, K. Sundara-Rajan, and A. Mamishev, “ID modulation: Embedding sensor data in an RFID timeseries,” *Proc. 7th Int. Conf. Inf. Hiding*, 2005, pp. 234–246.

2. D. De Donno, L. Catarinucci and L. Tarricone, "RAMSES: RFID Augmented Module for Smart Environmental Sensing," in *IEEE Transactions on Instrumentation and Measurement*, vol. 63, no. 7, pp. 1701-1708, July 2014.

3. R. Colella, L. Tarricone and L. Catarinucci, "SPARTACUS: Self-Powered Augmented RFID Tag for Autonomous Computing and Ubiquitous Sensing," *IEEE Transactions on Antennas and Propagation*, vol. 63, no. 5, pp. 2272 2281, May 2015.

4. J.-M. C. Picdi and B. Rmili, “An ultra low power RFID sensor platform for launchers applications,” *IEEE International Conference on Wireless for Space and Extreme Environments (WiSEE)*, pp.1-5, 7-9 Nov. 2013.

5. P. Escobedo-Araque, A. Martínez-Olmos, M. Á. Carvajal, A. J. Palma and J. Fernández-Salmerón, "Passive UHF RFID tag for spectral fingerprint measurement," *2015 IEEE 15th Mediterranean Microwave Symposium (MMS)*, Lecce, 2015, pp. 1-4.

6. UHF RFID Gen2 SL900A Sensory Tag IC [Online]. Available: http://www.ids-microchip.com.

7. UHF RFID Gen2 EM4325 Sensory Tag IC [Online]. Available: www.emmicroelectronic.com/