Extreme Wideband Arbitrary Waveform Generation by Multiband Signal Combination

Andreas Czylwik
University Duisburg-Essen, Duisburg, Germany

An extreme wideband arbitrary waveform generator (AWG) is presented which is used for creating extreme wideband THz radio signals. The block diagram of a corresponding THz transmitter which is based on infrared heterodyning is shown in Fig. 1. The output of the photodiodes is directly coupled to the transmitting antenna (A. Stöhr, A. Czylwik, T. Kaiser, K. Solbach: Tera50 - A 10 - 1000 GHz wireless measurement system with 50 GHz bandwidth. European Microwave Week 2013, Nuremberg, Nov. 7, 2013).

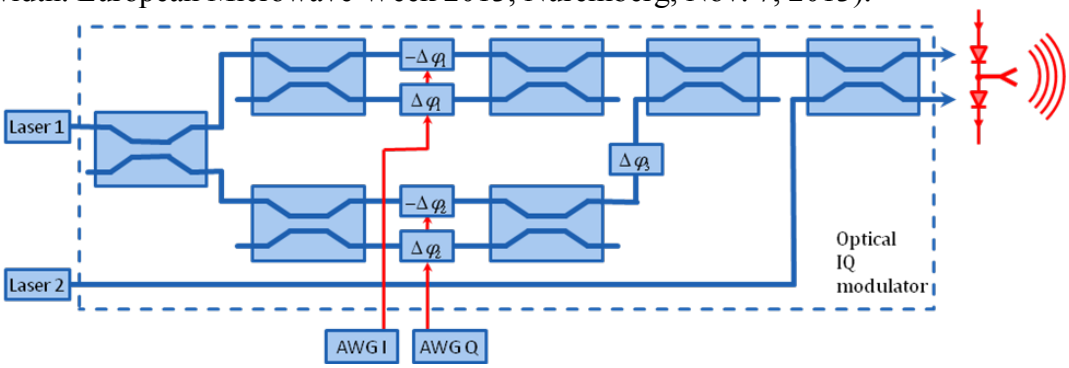

Fig. 1: THz transmitter with infrared heterodyning.

The extreme bandwidth I/Q AWGs are based on commercially available AWGs with smaller bandwidth. Since today commercially available AWGs show bandwidths of only up to 20 GHz, it is demonstrated that by combining two commercially available AWGs in the frequency domain, a combined arbitrary signal with approx. 40 GHz bandwidth can be achieved. The block diagram of the corresponding frequency multiplexer is shown in Fig. 2.

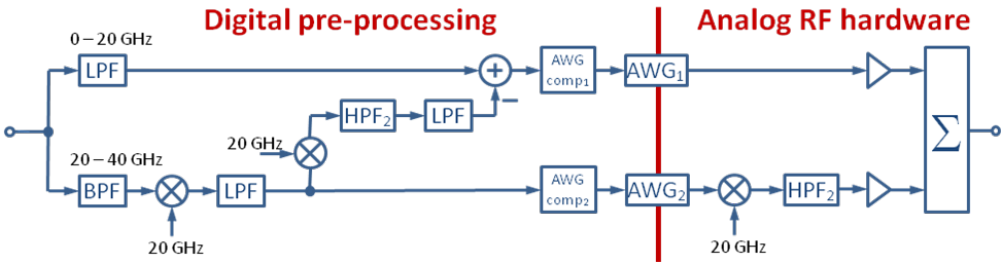

Fig. 2: Extreme bandwidth AWG by frequency multiplexing.

The blocks to the left of the AWGs show the digital pre-processing. In the digital domain, the input samples are divided into two subbands, each with a bandwidth of 20 GHz. The combination of bandpass filter (BPF), mixer, and low-pass filter (LPF) creates an IF signal with frequency components between 0 and 20 GHz. The blocks AWG-comp compensate the frequency response of the AWGs. On the right-hand side of the AWGs the analog hardware components are shown. AWG_1 directly creates the output frequency components between 0 and 20 GHz. The output of AWG_2 is up-converted by multiplying with a 20 GHz LO signal and high-pass filtering (HPF_2) so that only the upper sideband is fed to the final adding device. The task of the high-pass filter is to separate upper and lower sideband what cannot be done perfectly with a practical analog high-pass filter. Therefore, some distortions will be created in the frequency range 0 to 20 GHz. These distortions are subtracted in the digital domain from the upper signal path. During the meeting detailed measurement results are provided including the frequency response as well as the mean squared error (MSE) between specific desired waveforms and experimentally created waveforms. – Acknowledgement: This work was supported by Deutsche Forschungsgemeinschaft (DFG) under grant CZ57/8-1.