Using Weighting Filters to Assess Complex Fields Against the EU Directive for Worker Protection

Yngve Hamnerius*[(1)], Tomas Nilsson[(1)], and Kjell Attback[(2)]
(1) Chalmers Univ. of Technology, Goteborg, Sweden, http://www.chalmers.se
(2) SAAB AB, Ostersund, Sweden

The EU Directive 2013/35/EU requires that employers perform risk assessments for workers exposure to Electromagnetic fields. The exposure limit values are expressed as the induced electric field strength in the human body. The induced electric field cannot be measured, only calculated in computer simulations. In order to facilitate assessments, the directive also gives action levels expressed in electric and magnetic field strength. The action levels have been set so that the exposure limits shall not be exceeded.

The fields in work places are often not sinusoidal. Complex signals can be assessed using weighting filters. A weighting filter is designed with a frequency response that is the inverse to the limit curve see **Figure 1**. This weighting curve can be realized as a filter, composed of a number of RC (Resistor/Capacitor) links. As an example, the filter for the low action level of magnetic fields is shown **Figure 2**. A recording of the electric or magnetic field, with a sampling rate that allows all relevant frequency components to be resolved, can be used as the input signal to the filter, in a circuit simulation program. In the low frequency range the directive limits the peak value, without any time averaging. With an appropriate scaling of the amplification in the filter circuit, the action level is set to ± unity, which allows for an easy assessment of the peak value after filtering.

An RC-filter cannot exactly realize the frequency dependence of the weighting curves. The shown filter is designed so that the maximum deviation is less than 3 dB, which is the requirement in ICNIRP 2010. In addition to the amplitude, physical filters always influence on the phase of the field, which changes the peak value of the filtered field. ICNIRP, as an option to an RC-filter, describes a digital filter which is a direct inverse of the limit, where the phase angle of the filter is set to 180°, 90°, 0°, and -90°, when the limit varies directly proportional to $1/f^2$, $1/f$, f^0 or f respectively. Unfortunately these two filter types can give quite different peak values for transients. We suggest using RC-filters, as the phase variation of the filter is more "physical" than the phase variation in digital filters, where there is a direct jump in phase angle, at the break frequencies.

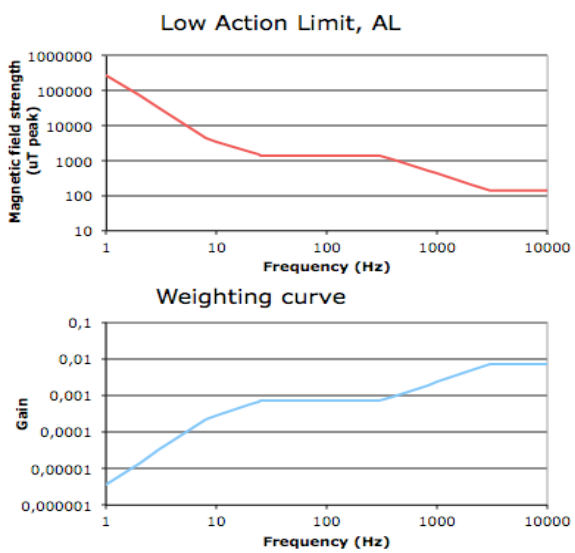

Figure 1 Low action level for external magnetic fields (top) and corresponding weighting curve (bottom).

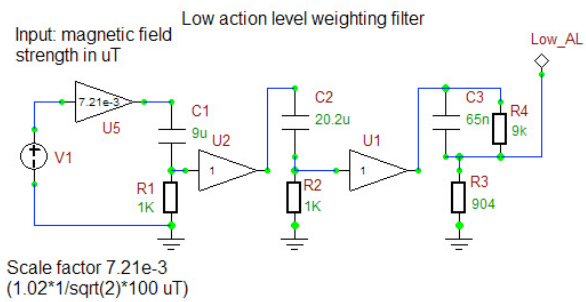

Figure 2 Filter for the low action level of magnetic fields.