Low-Power, High-Gain Transimpedance Amplifier for processing Ultra Low AC Current MEMS Output

M. Nenadovic* (1), N. Fiebig (1), and G. Fischer(1)
(1) IHP GmbH, Frankfurt (Oder), 15236, www.ihp-microelectronics.com

This paper presents a transimpedance amplifier designed in IHP SiGe 0.25 µm BiCMOS technology for processing nA currents delivered by MEMS in Wake-Up receiver system. Mechanical movement produces change in capacitance on MEMS structure resulting in small sinusoidal current which needs to be amplified and converted into square wave signal. This function is provided by an integrated chip with high gain, low power analog part sensitive to small currents. Chip is taped out and measured.

The analog part of the system consists of transimpedance amplifier, attenuator, two-stage amplifier and a comparator. Transimpedance amplifier consists of three CMOS inverters (see Fig 1.) Shunt-shunt feedback topology allows us to separately adjust gain and input impedance. CMOS input provides high sensitivity but requires high currents too in order to achieve a decent bandwidth. Voltage signal from transimpedance amplifier is 1 mV at best which is not enough to excitate a conventional comparator. Therefore, input circuit is followed by two-stage differential voltage amplifier. Attenuated contra phase voltage wave for one of the inputs of an amplifier is provided by simple two-stage CMOS inverter. This amplifier is realized as quasi differential PMOS stage followed by common-drain stage, which achieves an input sensitivity better than 1 mV and gain of 30 dB while consuming 1.8 µA. Comparator is a conventional differential NMOS stage with input sensitivity of 20 mV and voltage supply of 2.5 V. Design challenges are to get stable and accurate input impedance in requested frequency range of operation, high sensitivity, high transimpedance (500 kΩ at least) in order to produce rail-to-rail square wake-up signal as well as low current consumption (less than 10 µA).

Transimpedance amplifier is measured and operates with transimpedance of 870 kΩ and sensitivity better than 1 nA for frequencies up to 40 kHz. DC current consumption is 4.1 µA at a supply voltage of 1.5 V. Input impedance at operating frequencies is 110 Ω and is accurately adjusted by value of a resistor in input-to-output feedback branch and total gain of three CMOS inverters (see Fig 1.)

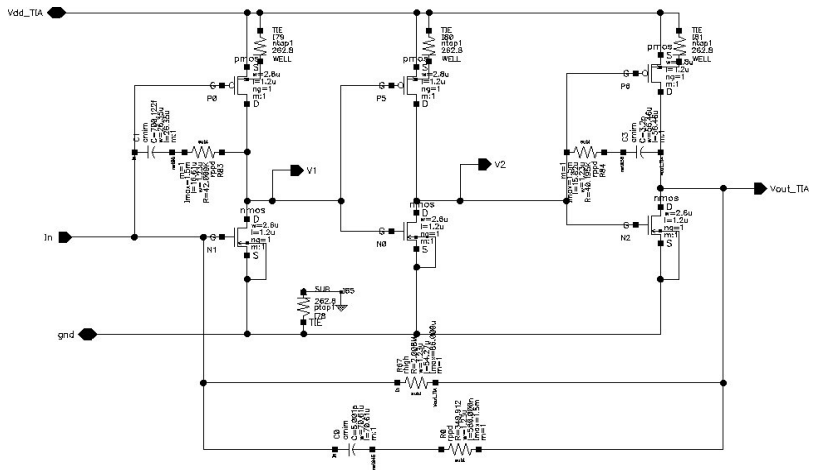

Fig 1. Schematic diagram of transimpedance amplifier

Measured transimpedance amplifier shows high sensitivity, low power consumption and precise input impedance as well as low die area of 80 µm x 85 µm. Therefore, it is a general building block for other area and consumption critical applications, such as in low current photodiode receivers and generally in energy harvesters.