A Brief Introduction of CSRH Digital Correlation Receiver (CDCR)

Fei Liu[(1,2)], Yihua Yan[(1,2)], Wei Wang[(1,2)], Lihong Geng[(1,2)] and Zhijun Chen[(1,2)]
(1) Solar Radio Research Group, National Astronomical Observatories, Chinese Academy of Sciences, 20A Datun Road, Chaoyang District, Beijing, China
(2) Key Laboratory of Solar Activity, National Astronomical Observatories of Chinese Academy of Sciences, 20A Datun Road, Chaoyang District, Beijing, China

Chinese Spectrum Radioheliograph (CSRH) system is a new generation of radio synthesis imaging telescope dedicated to observe the sun. The observing radio frequency range is 0.4 GHz ~ 2 GHz (CSRH-I) and 2 GHz ~15 GHz (CSRH-II). CSRH consists of 100 parabolic antennas (4.5 m diameter for CSRH-I and 2 m diameter for CSRH-II), front-end and back-end analog receiver subsystem, digital correlation receiver subsystem, monitor-control subsystem and data imaging subsystem. The short-time variation in solar activity research requires the capability of snap-shot imaging on real-time and of high frequency resolution imaging such that CSRH provides 25 ms temporal resolution in 64 radio frequency channels over 0.4~ 2 GHz and 206.25 ms temporal resolution in 528 radio frequency channels over 2~15 GHz.

The CSRH Digital Correlation Receiver (CDCR) subsystem takes the crucial role of CSRH as the result of solar radio synthesis imaging are based primarily on the accuracy and stability of the correlation data outputs from CDCR. Moreover, a great number of front-end and back-end signal receiving elements (i.e. 100 antennas) requires a kind of digital correlation receiver with complex scale and powerful signal processing capability. We will see that CDCR employs high speed ADCs (sampling rate is 1 GSps), advance and large scale FPGA to meet the system requirements. Its sampling bandwidth is 400 MHz and 2962 (946 for CSRH-I and 2016 for CSRH-II) complex correlation outputs are generated every 3 ms. In this paper we give a brief introduction of CDCR which covers system design (Fig.1), implementation and test results.

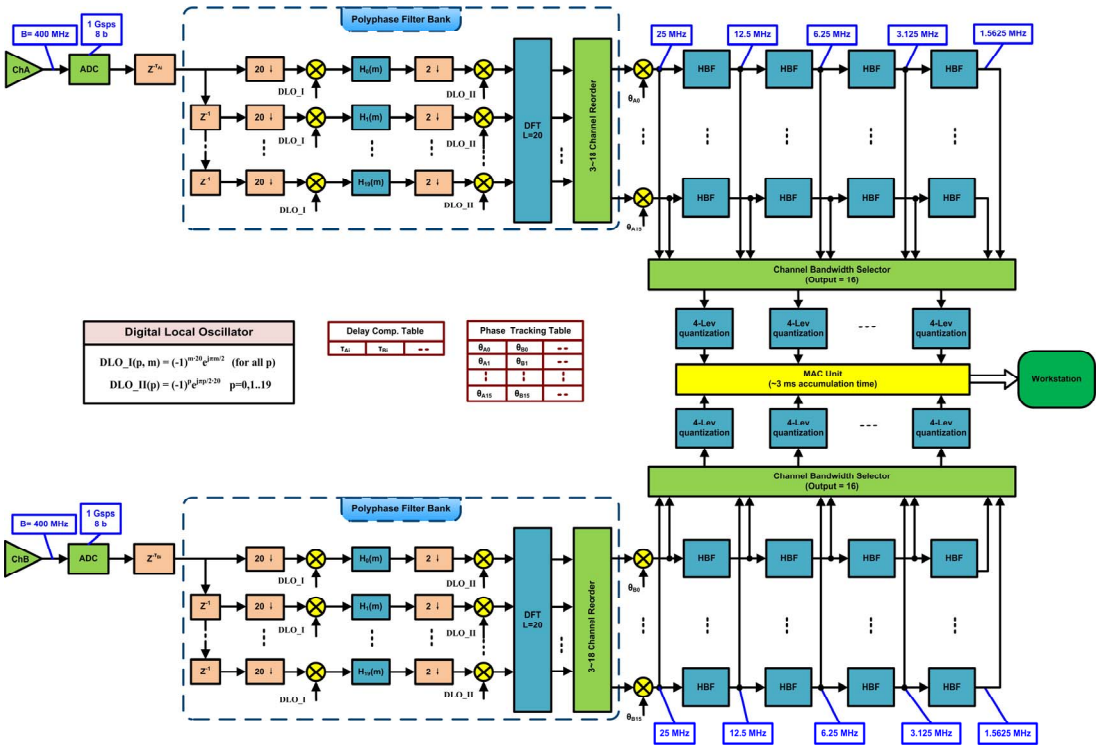

Fig. 1: CDCR signal processing flow chart