URSI GASS 2021, Rome, Italy, 28 August - 4 September 2021

RFID Reader and Wearable Tags for Smart Health Applications

Giacomo Paolini[(1,2)], Diego Masotti[(1)], and Alessandra Costanzo[(1,2)]
(1) DEI "Guglielmo Marconi", University of Bologna, Bologna, Italy
(2) DEI "Guglielmo Marconi", University of Bologna, Cesena, Italy

Abstract

This work presents an RFID system working in the 2.4 GHz band able to track and tridimensional locate people moving in indoor environments equipped with active tags realized on wearable and flexible textile materials. Thanks to the beam steering capabilities of the custom-designed reader both in the azimuth and in the elevation plane, it is also possible to detect potential falls that could happen to elderly or impaired people living alone and send an alarm to the family, the caregivers, or the medical team to point out the problem.
Moreover, a series of antennas on denim substrates has been realized and exploited in combination with the circuitry of the tag to enhance the comfort and psychological acceptability of the technology for the users.
For what concerns 2-D localization capabilities, an average error of about 20 cm has been detected in a room larger than 30 m^2, whereas an error of only 8.5 cm has been noticed along the vertical axis, widely sufficient to correctly detect the upright status of tagged people.

1 Introduction

Over recent years, the world population is growing older and continuous monitoring of elderly and impaired people has become increasingly a matter of urgency with the aim of controlling the activities of such kind of users but also to detect age-related diseases, i.e., Alzheimer's disease and senile dementia, which are causes of mental and physical disabilities strictly connected to the repetition of movements and behaviors.
Concurrently, the growing availability of low-cost, low-power Wireless Sensor Networks (WSN), led to an always increasing tendency in augmenting realistic environments with distributed Artificial Intelligence (AI), in order to create smart homes and smart spaces incorporating the typical technologies of the Internet of Things (IoT). In particular, Radiofrequency Identification (RFID) will play an essential function within these disciplines, since remote identification and detection of distributed objects have key roles in a wide number of modern applications, also conceiving the inclusion of wearable electronics into everyday life objects.
Firstly, in this work, the layout of a compact RFID reader working in the ISM (Industrial, Scientific and Medical) band at 2.4 GHz is presented. This device exploits the monopulse radar and bi-dimensional electronic beam steering techniques, thus allowing a tri-dimensional scanning of indoor scenarios.
Localization is retrieved with algorithms built on RSSI (Received Signal Strength Indicator) values, contrary to other techniques reported in the literature that are based on Roundtrip-Time-of-Flight (RToF) [1], phase delay [2], and group delay [3].
Secondly, the design of a wearable tag realized on a flexible textile material (denim) is shown, with the aim of integrating the receiving tag into common garments in the most transparent and non-invasive way.
Finally, results coming from validation measurements conducted in a harsh electromagnetic environment have been reported, demonstrating that this system can also be exploited in order to perform a non-invasive continuous localization and tracking of patients living alone or in rest homes, as well as a remote fall detector.

2 RFID Indoor Localization System for 3D Tracking and Fall Detection

2.1 Overview on the RFID Reader/Radar at 2.45 GHz

The design and realization of a 2.45 GHz RFID reader have been accomplished, thus exploiting the bidimensional electronic beam steering technique, and taking advantage of the monopulse radar concept [4]. For this purpose, a multi-layer architecture of the reader has been adopted with the radiative elements serving as transmitting and receiving antennas (Fig. 1 (a)) and placed at the opposite side of the RF and digital circuitry (Fig. 1 (b)).

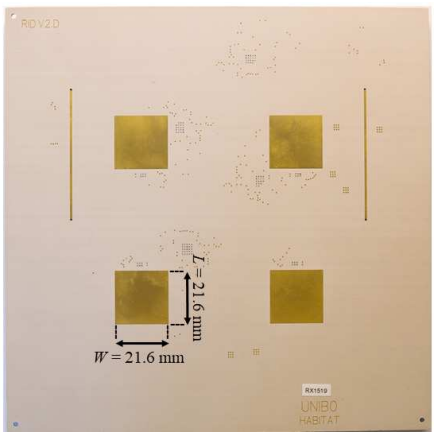

(a)

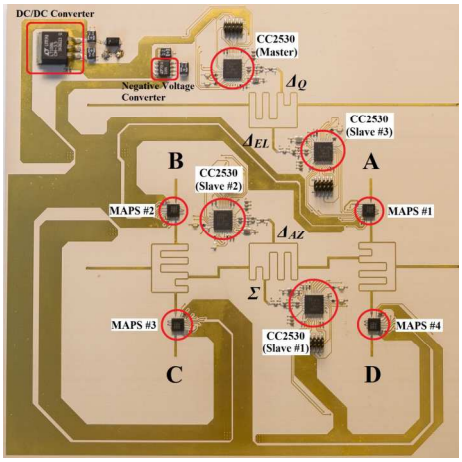

(b)

Figure 1. Pictures of (a) the top layer of the reader with the antenna array system and (b) the bottom layer with the digital and RF circutries [4].

The antenna array system is realized on a Taconic RF60-A substrate (ε_r=6.15, thickness: 0.635 mm) and is composed of four square patches fed by means of rectangular slots dug in the ground plane, whereas a bidimensional monopulse comparator system has been designed conceiving the Σ, Δ_{AZ}, Δ_{EL} and Δ_Q ports (see the rat race hybrid couplers in Fig. 1(b)) that correspond respectively to the in-phase, the out-of-phase in the azimuth and the elevation plane, and an auxiliary signal, which in turns represent the I/Os (Input/Output) of the TI (Texas Instruments) CC2530 RF SoCs (System-on-a-Chip). These four ICs (Integrated Circuits) are further part of a Master-Slaves system based on SPI (Serial Peripheral Interface) communication and connected to the 6-bit digital phase shifters (Macom MAPS-010164) required for allowing the electronic beam steering in both the azimuth and the elevation planes.
Given the limited dimensions of the reader (17 x 17 cm^2, with a thickness of only 1.5 mm), it can be easily positioned within common furniture, such as frames or wall lamps, with the aim of seamlessly integrate it into everyday life environments.

2.2 Wearable Tags on Textile Substrate

Besides the reader's realization, the design of a suitable RFID tag is of great importance, given that it has to be placed in direct contact with people, especially elderly, that could not feel at ease with this kind of technological smart objects.
For this reason, the patch antennas of the tags have been reproduced on a denim substrate, so that they can be directly designed in jeans apparel (Fig. 2), with their metallization realized with adhesive copper.
Moreover, evaluations regarding the behaviour of these flexible antennas have been assessed when stressed under a force able to bend them both in the horizontal H-plane and in the vertical E-plane. In that sense, VNA (Vector Network Analyzer) measurements did not demonstrate any significant variation both in terms of gain and frequency tuning during the bending tests with the antenna worn on the chest [5].

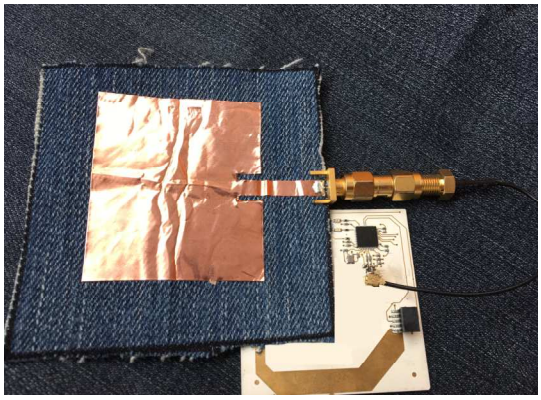

Figure 2. Layout of the RFID tag antenna realized on denim together with its TI CC2530 control/elaboration circuitry board.

3 Measurements and Results

In order to retrieve the tridimensional location of the RFID tags, two angular positions (in the azimuth and the elevation planes) have to be obtained, in addition to the distance information coming from the values of RSSI power.
The Σ, Δ_{AZ}, Δ_{EL} values for every angular step (in this case, 61 steps for a total angular scan of [-45°÷45°] over each plane) are exploited to retrieve the two angular positions by means of the MPR (Maximum Power Ratio), a figure of merit that is determined as follows:

$$MPR_{AZ} = \Sigma_{AZ} - \Delta_{AZ}$$
$$MPR_{EL} = \Sigma_{EL} - \Delta_{EL} \quad (1)$$

On the other hand, the absolute distance of the tag from the reader is obtained thanks to an algorithm that previews a precise calibration phase that allows obtaining the path-loss exponents n for the different calibration zones in which space around can be divided in the azimuth (subscript i) and in the elevation plane (subscript j), and the received powers P_0 at a certain reference distance d_0. Finally, distance d is calculated as follows, considering P_{Rm} the actually received RSSI (in dBm) for that d:

$$d = d_0 \cdot 10^{\frac{(P_{0i,j} - P_{Rm})}{10 \cdot n_{i,j}}} \quad (2)$$

Regarding the results obtained by these measurements, it is worth noticing that adopting the custom realized wearable tags an average 2-D error of 20.30 cm in the xy plane and an average height z-error of 8.50 cm have been detected, resulting in a total tri-dimensional average error of 16.37 cm. The measurements have been conducted in a

typical laboratory environment, harsh from the electromagnetic point of view, whose overall dimensions are 34 m^2.

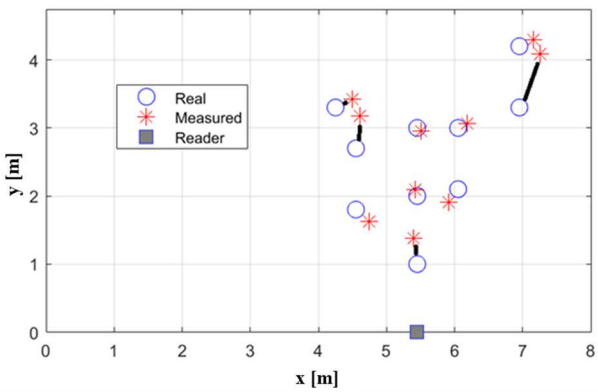

Figure 3. Actual and measured positions of the user equipped with the wearable tag realized on a double layer of denim substrate and placed in the chest position.

Finally, the system has been tested with the aim of detecting potential falls that could occur to people living alone in indoor environments, exploiting the beam scanning capability of the reader in the elevation plane: different experiments have been conducted for various situations that could happen when an unwanted fall occurs (i.e., lying down face upwards and downwards, lying down lateral on both sides, and sitting on the floor) and for the five different positions occupied by the user reported in Fig. 4 (reader-tag distances varying from 0.5 to 2 and 3 meters); this set of measurements showed the correct detection of the falls, always in less than 20 seconds, the time needed to the algorithm to distinguish the real cases and the occurrences of false-positive results.

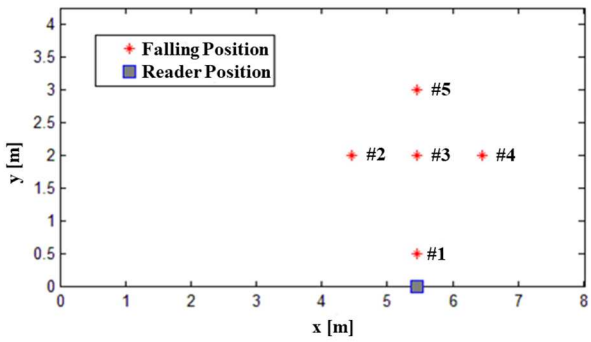

Figure 4. The five different falling positions that have been adopted during the test and respective reader position.

4 Acknowledgements

This research was partly supported by the European Commission and the Emilia-Romagna Region, within the framework of the Regional Operative Project "HABITAT" (Home Assistance Based on the Internet of Things for the AuTonomy of everybody).

5 References

1. T. Ussmueller, D. Brenk, J. Essel, J. Heidrich, G. Fischer and R. Weigel, "Roundtrip-Time-of-Flight based localization of passive multi-standard RFID-tags," *2012 IEEE International Conference on Wireless Information Technology and Systems (ICWITS)*, Maui, HI, USA, 11-16 November 2012, pp. 1-4, doi: 10.1109/ICWITS.2012.6417725.

2. C. Wan, L. Zhao, Y. Ding, S. Xue, "A two-phase ranging algorithm for sensor localization in structural health monitoring," Advances in Mechanical Engineering, 9, 1, 2017, pp. 1–8, doi: 10.1177/1687814016685964.

3. L. Kumar, A. Tripathy, and R. M. Hegde, "Robust Multi-Source Localization Over Planar Arrays Using MUSIC-Group Delay Spectrum," *IEEE Transactions on Signal Processing*, **62**, 17, pp. 4627-4636, September 2014, doi: 10.1109/TSP.2014.2337271.

4. G. Paolini, D. Masotti, F. Antoniazzi, T. Salmon Cinotti, and A. Costanzo, "Fall Detection and 3-D Indoor Localization by a Custom RFID Reader Embedded in a Smart e-Health Platform," *IEEE Transactions on Microwave Theory and Techniques*, **67**, 12, December 2019, pp. 5329-5339, doi: 10.1109/TMTT.2019.2939807.

5. G. Paolini, D. Masotti, and A. Costanzo, "Wearable RFID Tag on Denim Substrate for Indoor Localization Applications," *2019 49th European Microwave Conference (EuMC)*, Paris, France, 1-3 October 2019, pp. 504-507, doi: 10.23919/EuMC.2019.8910879.