URSI GASS 2021, Rome, Italy, 28 August - 4 September 2021

TALON Demonstration Correlator Architecture for Early SKA Array Assemblies

Mike Pleasance(1), Brent Carlson(1), Sonja Vrcic(1), and Thushara Gunaratne(1)
(1) The National Research Council of Canada – Herzberg Astronomy and Astrophysics, Penticton, BC, Canada

Abstract

The roll-out plan for Square Kilometer Array (Phase 1) (SKA1) Mid Frequency Telescope calls for five array assemblies which progressively integrate an increasing number of receptors and capabilities. The TALON Demonstration Correlator (TDC) is a small correlator / beamformer system to implement the first two array assemblies of the SKA1 Mid Frequency Telescope Correlator / Beamformer (Mid.CBF). The objective of the TDC design is to minimize the amount of hardware required for the early releases, while maximizing re-use of firmware and software across all array assemblies. The TDC is based on the TALON technology and Frequency Slice Architecture (FSA) developed by the National Research Council (NRC) of Canada for the Mid.CBF. The TDC can process input from up to 16 dual-polarized receptors and can simultaneously generate the full visibility sets for all the baselines and form a beam as required for precise timing of known pulsars, both for 800 MHz of observed bandwidth.

1 Introduction

After the successful completion of the Critical Design Review of the entire telescope in December 2019, the Square Kilometre Array (Phase-1) (SKA1) (www.skatelescope.org) is now progressing into the construction stage. The Mid.CBF system must be able to handle data from the ~200 SKA1 receptors observing in any of six SKA1 Bands that spans 0.35 – 15.4 GHz and generate a variety of data products including visibility sets and tied-array beams for pulsar search, pulsar timing and VLBI [1]. Further, Mid.CBF must handle up to 16 sub-arrays, so that observing band, processing modes and output products can be independently selected for each sub-array. The Mid.CBF design is based on the NRC-developed Frequency Slice Architecture (FSA) [2] and TALON technology [3]. The TALON-DX signal processing board is a custom platform that pairs an Intel Stratix 10 SoC FPGA with high-speed fiber-optic I/O and DDR4 memory. The TALON Line Replaceable Unit (LRU) is a 19' rack mount unit that houses two TALON-DX boards and the required power supplies and fans (see Figure 1).

The FSA partitions the system into two parts, the 'VCC-Part' and 'FSP-Part'. As shown in Figure 2, the VCC-Part performs per-receptor signal processing and generates intermediate products which are distributed to

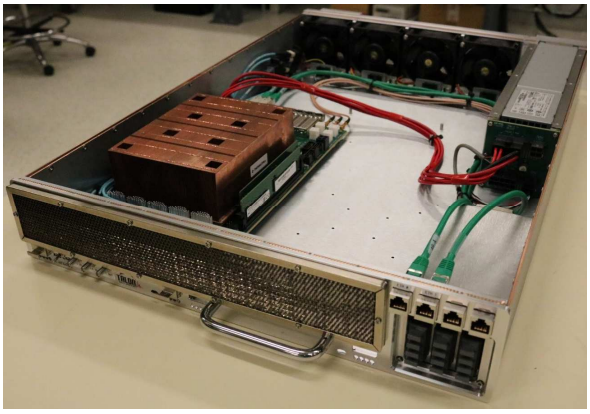

Figure 1. Prototype TALON-DX signal processing board housed in the 2U rack-mount TALON LRU.

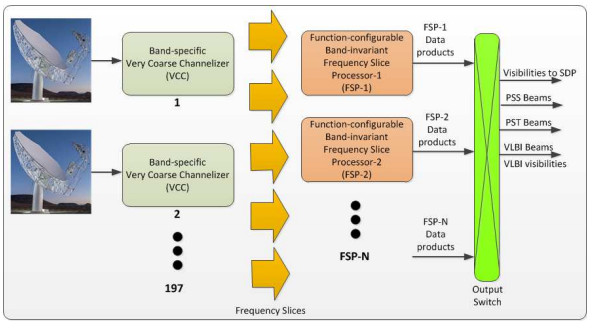

Figure 2. Conceptual view of the Frequency Slice Architecture (FSA) illustrates the split between the VCC-Part (band-dependent) and the FSP-Part (band-agnostic) processing.

the FSP-Part. All Band-dependent processing is implemented in the VCC-Part, allowing the FSP-Part to perform correlation and beamforming functions for all sub-arrays, although each may be observing a different Band. The FSP-Part is comprised of a number of Frequency Slice Processors (FSPs), each of which can be independently configured to perform one of four "function modes": Correlation, PSS Beamforming, PST Beamforming and VLBI Beamforming (see Figure 3). Use of re-configurable FSPs allows Mid.CBF to provide full commensality (correlation and pulsar beamforming) in lower SKA bands where there is the most interest for pulsar observations, or to perform correlation for up to 5 GHz of bandwidth per polarization for higher SKA bands (Band 5a/b).

The Mid.CBF uses groupings of TALON LRUs which are optically connected via passive optical circuits to perform

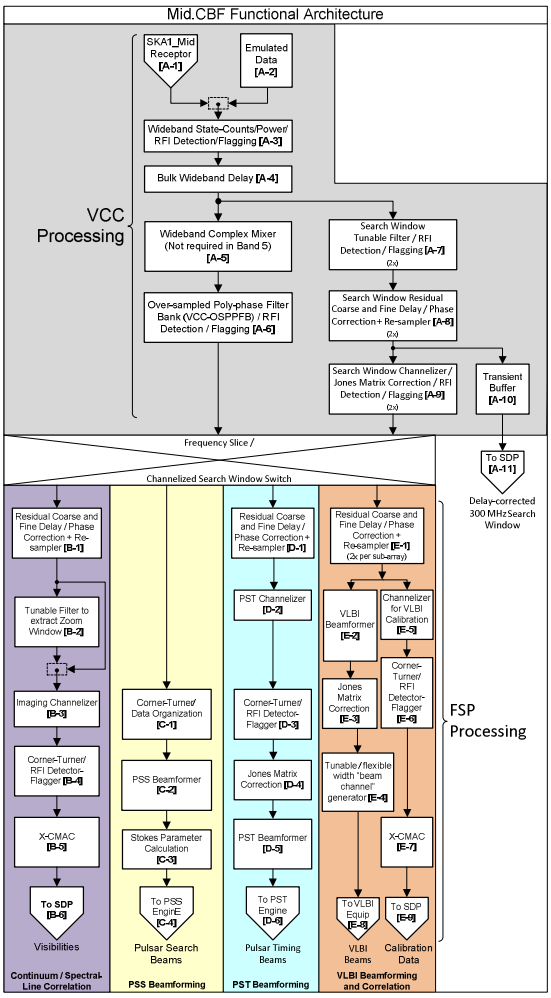

Figure 3. Functional architecture of Mid.CBF showing the key signal processing steps of the VCC processing and each FSP "function mode".

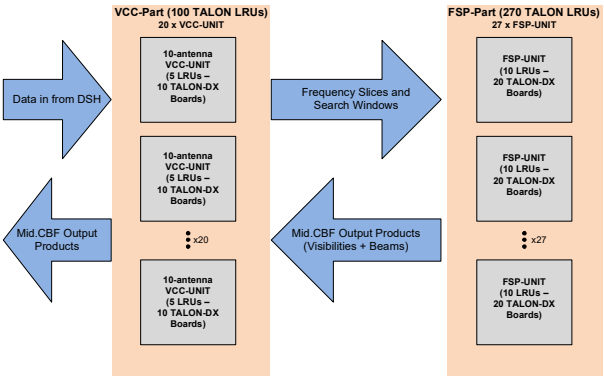

Figure 4. The grouping of VCC-Parts and FSP-Parts in the Mid.CBF.

the signal processing functions. Each TALON-DX board in the VCC-Part processes data for one SKA1 Mid receptor and generates a number of ~200 MHz Frequency Slices and two tunable ~300 MHz Search Windows to be used for searching for pulsars and transients. Each Frequency Slice or Search Window can be distributed to any of 27 FSP-Units in the FSP-Part of the system. As shown in Figure 4, TALON-DX boards in the VCC-Part are grouped into 20 VCC-Units, each of which has 10 TALON-DX boards (5 TALON LRUs) and a custom optical circuit (VCC-MESH). Each FSP-Unit contains 20 TALON-DX boards (10 TALON LRUs) a custom optical circuit (FSP-MESH). Mid.CBF requires a total of 840 TALON-DX boards (370 TALON LRUs) to implement the required processing.

2 TALON Demonstration Correlator (TDC)

The roll-out plan for SKA1 Mid telescope calls for five array assemblies which progressively integrate an increasing number of receptors and capabilities [4]. The first two Array Assemblies (AA), named AA0.5 and AA1, require a correlator for 4 and 16 receptors, respectively, operating in SKA Band 2 and performing correlation and basic PST beamforming.
Using the physical architecture planned for the full Mid.CBF deployment this would require two VCC-Units to handle up to twenty receptors, four FSP-Units for correlation and four FSP-Units for PST beamforming; thus requiring a total of 180 TALON-DX boards in 90 TALON LRUs spread across eight standard 19" racks. This approach uses an amount of hardware which is an order of magnitude greater than what is required to perform the essential signal processing required for AA1.

The TALON Demonstration Correlator (TDC) uses the TALON hardware platform (optically connected TALON-DX signal processing boards) and the FSA signal processing firmware blocks [5] with a physical architecture better suited for correlator/beamformer systems that facilitates up to 16 receptors. While the connectivity and data flow between TALON-DX boards is different from Mid.CBF, the same hardware (TALON LRUs and optical circuits) and signal processing firmware is used in TDC. This approach places the development of the TDC directly on the path to later SKA array assemblies and allows early verification of the FSA signal processing algorithms [6].

3 TDC Optimizations

The functionalities required for SKA AA0.5 and AA1 are limited to generating the visibility set for imaging through auto- and cross- correlations and forming a single PST beam at the same delay center on the sky as for visibilities (i.e. 'boresight'). Given the small number of receptors, a single TALON-DX board can simultaneously process input from a Band 2 receptor, and perform correlation and PST beamforming for a sub-set of input bandwidth. Therefore, the flexibility of different FSPs operating in different processing modes is not required. The key design goal for the TDC is to minimize the amount of hardware required to implement the SKA AA0.5 and AA1 functionality due to the high cost of TALON LRUs in prototype quantity, compared to volume quantity. The TDC uses one TALON-DX per receptor to perform all signal processing and an FSP-MESH optical circuit to provide point-to-point serial data links between each pair

of TALON-DX boards. The proposed physical architecture is shown in Figure 5.

The TDC system performs the following functions:

- Receiving SKA Band 2 packets from each receptor.
- Performing bulk delay corrections.
- Channelization into ~200 MHz Frequency Slices.
- On each of four selected Frequency Slices:
  - Residual delay tracking / re-sampling.
  - 16K channelization for correlation.
  - 4K over-sampled channelization for PST.
- Distribution of fine channels to other FPGAs so each FPGA has a fraction of the bandwidth for all receptors.
- Processing of up to 800 MHz bandwidth:
  - Correlation of fine channels.
  - PST beamforming on boresight.
- Output products sent out on external interfaces:
  - Visibility set to Science Data Processor.
  - PST beam to Pulsar Timing Engine.

The visibility set contains auto & cross-correlations for 128 baselines with ~59,000 channels across 800 MHz of correlated bandwidth. The PST beam is comprised of ~15,000 over-sampled channels across the same bandwidth.

Figure 6 shows the functional architecture for the TDC. Note that the signal processing blocks shown are identical to those used in Mid.CBF.

For an observation band of 800 MHz, the TDC architecture scales with the number of receptors up to a maximum of 16 receptors in the following increments:

- 1 – 4 receptors requires 4 TALON-DX boards.
- 5 – 8 receptors requires 8 TALON-DX boards.
- 9 – 16 receptors requires 16 TALON-DX boards.

All configurations fit in a single standard 19” rack and use conventional air cooling.

4 Expanding TDC Functionality

The TDC functionality described in the previous section has been tailored to the capabilities planned for the early SKA_Mid array assemblies. The initial design of the FPGA firmware indicates an approximately 50% resource usage in the Stratix 10 FPGAs on the TALON-DX boards.

Additional functionality such as Pulsar Search (PSS) beamforming or tunable zoom window extraction could likely be added to the TDC without adding hardware if these capabilities are desired earlier than SKA Array Assembly 2 (AA2).

The TDC physical architecture allows for 8 TALON-DX boards to be added to process additional bandwidth or implement other processing modes such as generating off-

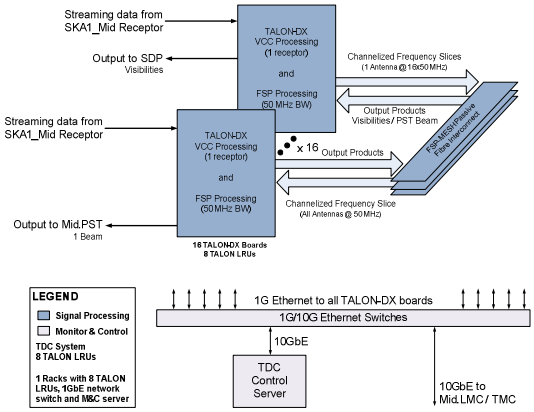

Figure 5. Physical architecture of TDC for SKA AA1 showing connectivity and data flow between TALON-DX FPGA boards.

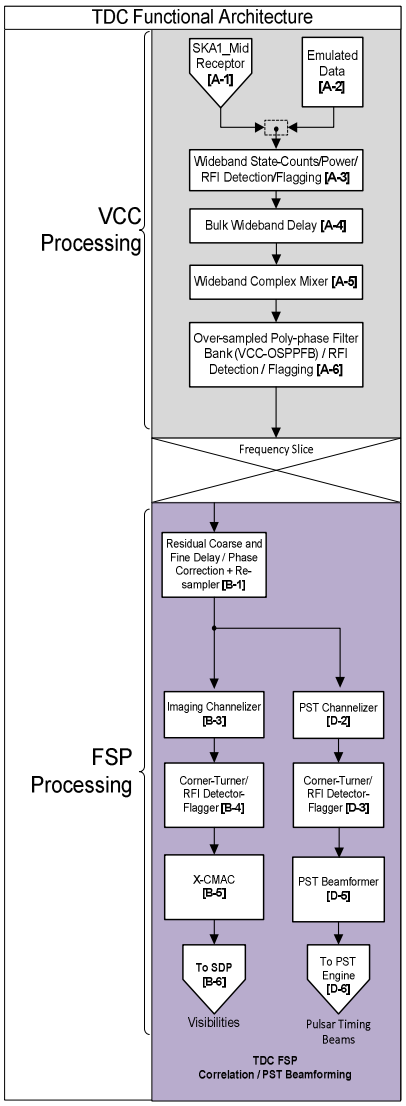

Figure 6. Functional architecture of TDC showing the key signal processing steps of the VCC processing and single FSP function mode for correlation and PST beamforming.

axis PSS, PST or VLBI beams. This comes from the use of the Mid.CBF FSP-MESH optical circuit which provides full mesh connectivity between up to 24 TALON-DX signal processing boards.

5 TDC Deployment

The deployment of instances of the TDC is currently planned for the following radio telescopes:

SKA Mid Array Assembly 0.5 (AA0.5)
Planning for an early SKA Mid AA 0.5 is in progress and the expected functionality is as follows:

- Four SKA Mid receptors.
- 200 MHz correlated bandwidth.
- 200 MHz boresight PST beam.
- To be deployed in late 2022 / early 2023.

SKA Mid Array Assembly 1 (AA1)
The planned functionality for SKA Mid AA1 is as follows:

- Up to 16 SKA Mid receptors (8 minimum).
- 800 MHz correlated bandwidth.
- 800 MHz boresight PST beam.
- To be deployed in early 2024.

NRC Synthesis Telescope (Penticton, BC)
The NRC has provided funding through the internal "Small Teams" initiative to upgrade the Synthesis Telescope (ST) located at the NRC's Dominion Radio Astrophysical Observatory (DRAO) in Penticton, BC. This upgrade will include a TALON Demonstration Correlator. Initial functionality will mirror SKA Mid AA0.5, but plans are to eventually increase the capability as follows:

- Seven receptors equipped with "Incoherent Clocking" digitizers [7].
- 800 MHz (or more) correlated bandwidth.
- Multiple zoom windows for spectral line work.
- Initial deployment (4 ST dishes) in early 2023 with ongoing upgrades to follow, such as integrating the remaining three ST dishes.

6 Summary

The TALON Demonstration Correlator (TDC) is a small correlator/beamformer system designed to minimize the amount of hardware (and therefore cost) required for the early SKA Mid array assemblies. The TDC implements identical signal processing firmware blocks designed for the full SKA1_Mid Correlator/Beamformer (Mid.CBF) system in order to maximize the re-use of firmware and software and provide an early on-the-sky verification of the Frequency Slice Architecture (FSA) signal processing algorithms. The TDC also uses the same TALON-DX signal processing boards, TALON LRUs, and passive optical circuits as SKA1 Mid.CBF. The TDC is capable of facilitating an array of up to 16 receptors and provides 800 MHz of correlated bandwidth and Pulsar Timing beamforming. The processing capabilities of the TDC can be expanded by adding additional TALON-DX boards to the system and/or implementing new software/firmware. There are currently three planned deployments for the TDC; the first two SKA1_Mid Array Assemblies and the Synthesis Telescope (ST) at the NRC Dominion Radio Astrophysical Observatory (DRAO).

7 Acknowledgements

The TALON Demonstration Correlator design has been contributed to, and reviewed by, the SKA Mid.CBF Pre-construction team and the current SKA CSP Interface Prototype Agile (CIPA) Team. In addition to the authors, these two teams include the following members:

Dean Chalmers, National Research Council of Canada
David Del Rizzo, National Research Council of Canada
Mark Garstin, National Research Council of Canada
Donna Morgan, National Research Council of Canada
Michael Rupen, National Research Council of Canada
Ralph Webber, National Research Council of Canada
Heng Zhang, National Research Council of Canada
David Stevens, MDA Systems Ltd.

8 References

[1] Info Sheet – The Telescopes, the Square Kilomtre Array Organization. [Online] http://www.skatelescope.org/wp-content/uploads/2018/08/16231-factsheet-telescopes-v71.pdf

[2] M. Pleasance et. al., "SKA1 CSP Mid Correlator and Beamformer Sub-element Detailed Design Document", SKA-TEL-CSP-00000066. [Restricted Access].

[3] M. Pleasance, H. Zhang, B. Carlson, R. Webber, D. Chalmers and T. Gunaratne, "High-performance hardware platform for the Square Kilomtre Array Mid Correlator & Beamformer," 2017 XXXIInd General Assembly and Scientific Symposium of the International Union of Radio Science (URSI GASS), Montreal, QC, 2017.

[4] R.T. Lord, D. Gammon, S, "Roll-out Plan for SKA1_Mid", SKA-TEL-AIV-2410001. [Restricted Access].

[5] W. Kamp, N. Abel and G. Comoretto, "Complex Multiply Accumulate Cells for the Square Kilometre Array Correlators," 2018 International Conference on ReConFigurable Computing and FPGAs (ReConFig), Cancun, Mexico, 2018.

[6] T. Gunaratne, B. Carlson, and G. Comoretto, "Novel RFI Mitigation Methods in the Square Kilometre Array 1 Mid Correlator Beamformer," J. Astron. Instrum., vol. 08, no. 01, p. 1940011, Feb. 2019.

[7] B. R. Carlson, "Incoherent clocking in coherent radio interferometers," Electronics Letters, vol. 54, no. 14, pp. 909–911, Jun. 2018.