A COMPARATIVE STUDY OF DIFFERENT PHASE DETRENDING ALGORITHMS FOR SCINTILLATION MONITORING

AUTHOURS:

Hossein Ghobadi*[1,2], Caner Savas[3], Luca Spogli[1], Fabio Dovis[3], Antonio Cicone[4] and Massimo Cafaro[2]

(1) Istituto Nazionale di Geofisica e Vulcanologia, Rome, Italy

(2) Department of Engineering for Innovation, University of Salento, Lecce, Italy

(3) Department of Electronics and Telecommunications, Politecnico di Torino, Turin, Italy

(4) INAF-IAPS, Rome, Italy

CONTENTS

TREASURE
TRAINING RESEARCH AND APPLICATIONS NETWORK TO SUPPORT THE ULTIMATE REAL TIME HIGH ACCURACY EGNSS SOLUTION

Ionospheric Scintillation

- The sudden and rapid fluctuations of phase and amplitude of the GNSS signals triggered by ionospheric plasma irregularities are commonly referred to as “ionospheric scintillations” and are due to the diffraction of the signal.

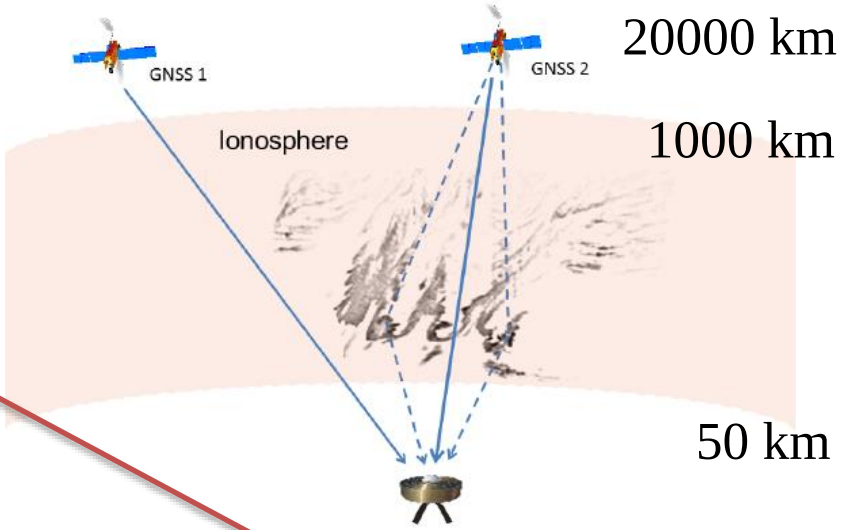

If the signal meets the “irregularities of the ionosphere" the signal may “Scintillate"

Scintillation may determine:
Loss of Lock
Reduced positioning accuracy

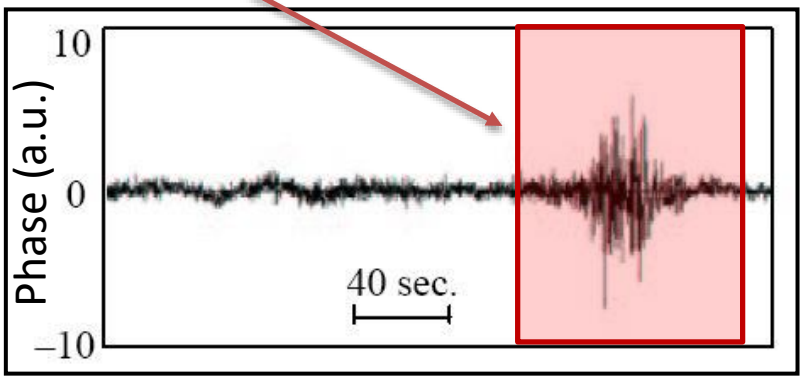

Ionospheric Scintillation

- Quantify scintillation: Phase and amplitude indices (σ_φ and S_4 respectively)

$$S_4 = \sqrt{\frac{<I^2> - <I>^2}{<I>^2}}$$

where:

I = Field Intensity

φ_{detr} is the **<u>detrended</u>** phase

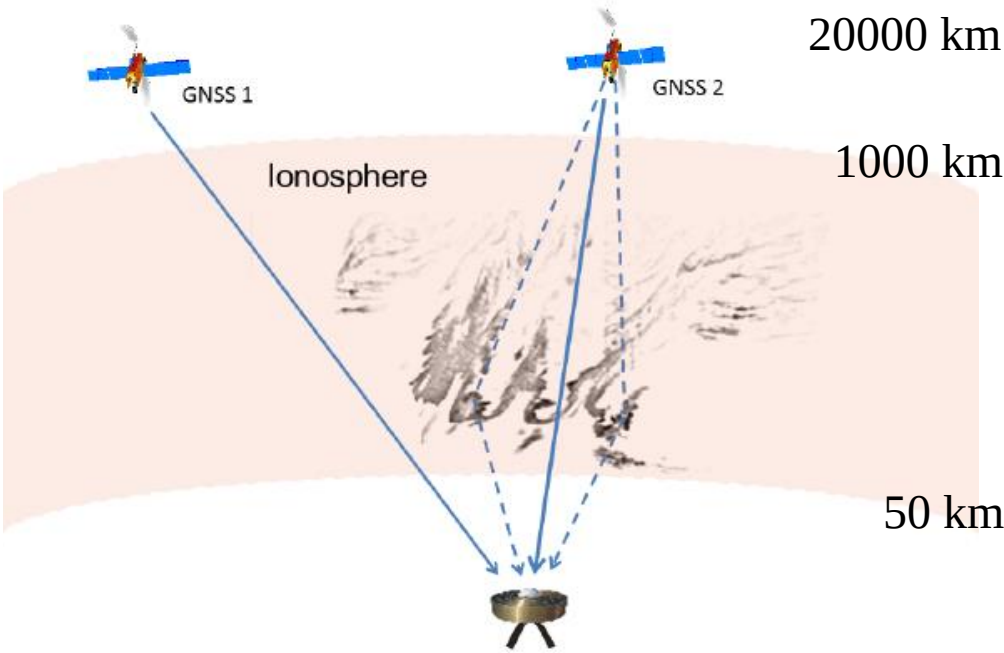

Phase Detrending Techniques

1. **Cascaded High Pass Filters**
2. **Butterworth Filter**
3. **Fast Iterative Filter (FIF)**

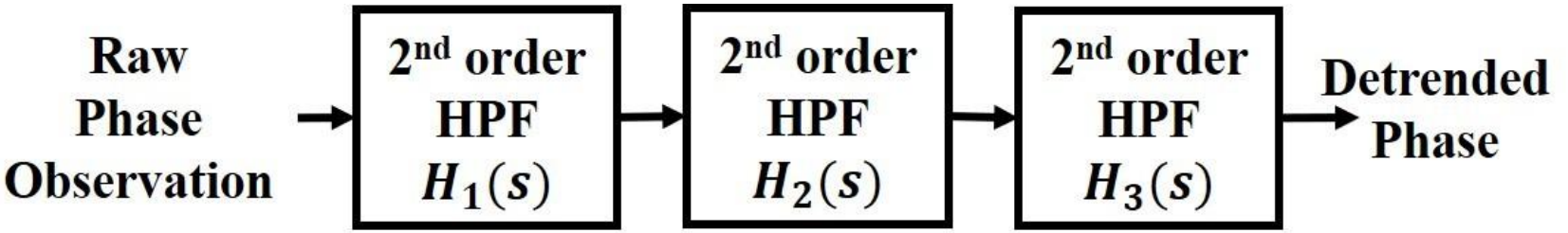

$$H_i(s) = \frac{s^2}{s^2 + \alpha_i \omega_N s + \omega_N^2}$$

where $f_N = \omega_N / (2\pi)$ is the filter's corner frequency in Hz. α_1, α_2, and α_3 are the coefficients, the product $H_1(s)H_2(s)H_3(s)$ makes up the frequency response of the high-pass filter.

Phase Detrending Techniques

1. Cascaded High Pass Filters
2. **Butterworth Filter**
3. Fast Iterative Filter (FIF)

$$f_c = \frac{f_c'}{\sqrt{2^{1/N} - 1}}$$

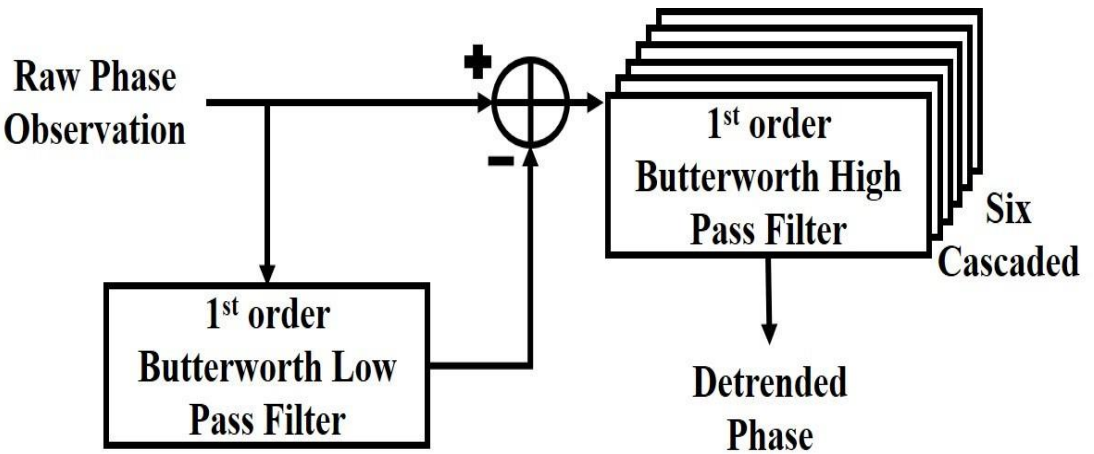

where N is set to 6 in our case and by setting f_c = 0.1 Hz, it is obtained that f_c' = 0.035 Hz.

Phase Detrending Techniques

1. ~~Cascaded High Pass Filters~~
2. ~~Butterworth Filter~~
3. **Fast Iterative Filter (FIF)**

$$\phi_{detr}(\Delta t) = \sum IMC^{\nu \geq \nu_c}(\Delta t)$$

Ionospheric Free Linear Combination (IFLC) takes into account for the bulk of the refractive effects.

$$\Phi_{IFLC} = \frac{\Phi_{E1}E_1^2 - \Phi_{E5a}E_{5a}^2}{E_1^2 - E_{5a}^2}$$

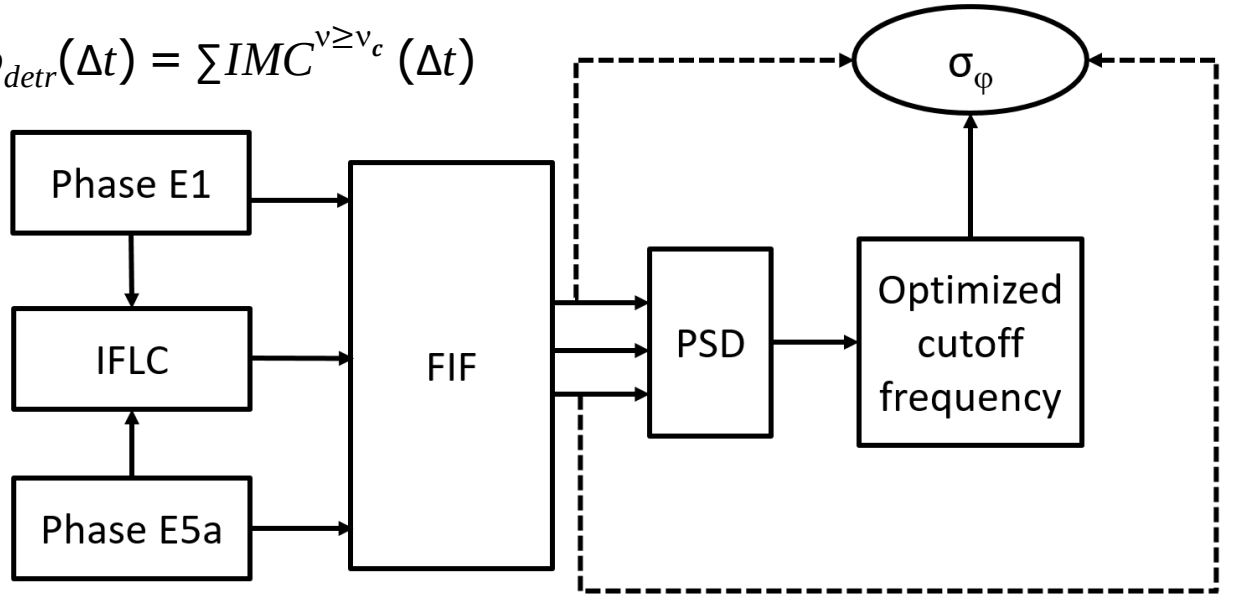

where the signal is decomposed into functions named Intrinsic Mode Components (IMCs), v_c is the cutoff frequency, hence for time interval Δt between t_0 and t_1 minute and detrended phase (ϕ_{detr}), the value of σ_φ will be computed. The crossing points between Power Spectral Desnsity (PSD) of the Phases and IFLC indicate the new cutoff frequency (υ_c).

Data and Method

Where:

- Svalbard (78.169◦ N, 15.993◦ E).
- Center for Radio Astronomy and Astrophysics at Mackenzie - CRAAM (71.673◦ S, 2.841◦ W).

When:

During the solar storm occurred in September 2017.

How:

software-defined radio (SDR) based GNSS receiver is used to post-process raw sampled GNSS data and to implement the aforementioned detrending algorithms.

Data and Method

Selected ionospheric scintillation events during 8 September 2017.

Case event	Satellite	Time	Location
1	G06	18:35 – 19:00	Svalbard
2	G09	18:35 – 19:00	Svalbard
3	E04	18:35 – 19:00	Svalbard
4	E19	18:35 – 19:00	Svalbard
5	G10	02:05 – 02:50	Brazil

Results

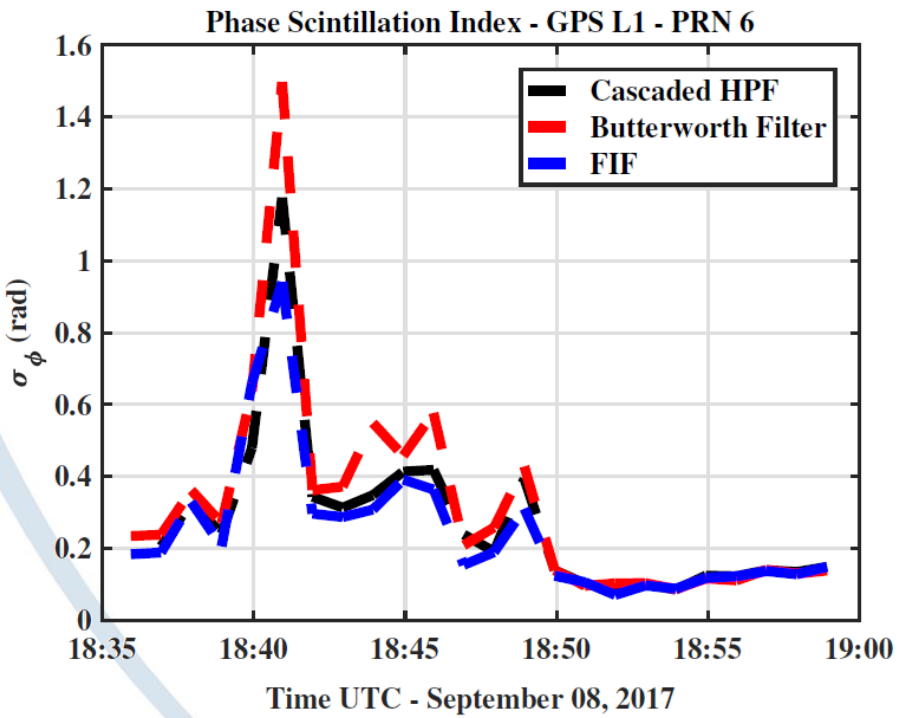
Phase Scintillation Index - GPS L1 - PRN 6
Cascaded HPF
Butterworth Filter
FIF
σ_ϕ (rad)
1.6
1.4
1.2
1
0.8
0.6
0.4
0.2
0
18:35
18:40
18:45
18:50
18:55
19:00
Time UTC - September 08, 2017

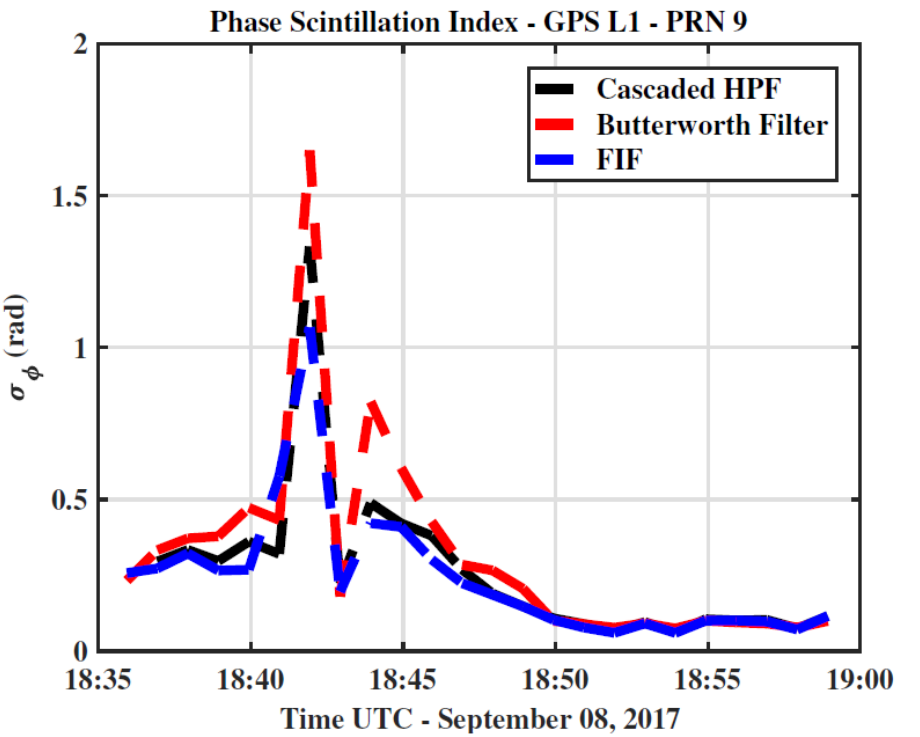
Phase Scintillation Index - GPS L1 - PRN 9
Cascaded HPF
Butterworth Filter
FIF
σ_ϕ (rad)
2
1.5
1
0.5
0
18:35
18:40
18:45
18:50
18:55
19:00
Time UTC - September 08, 2017

Results

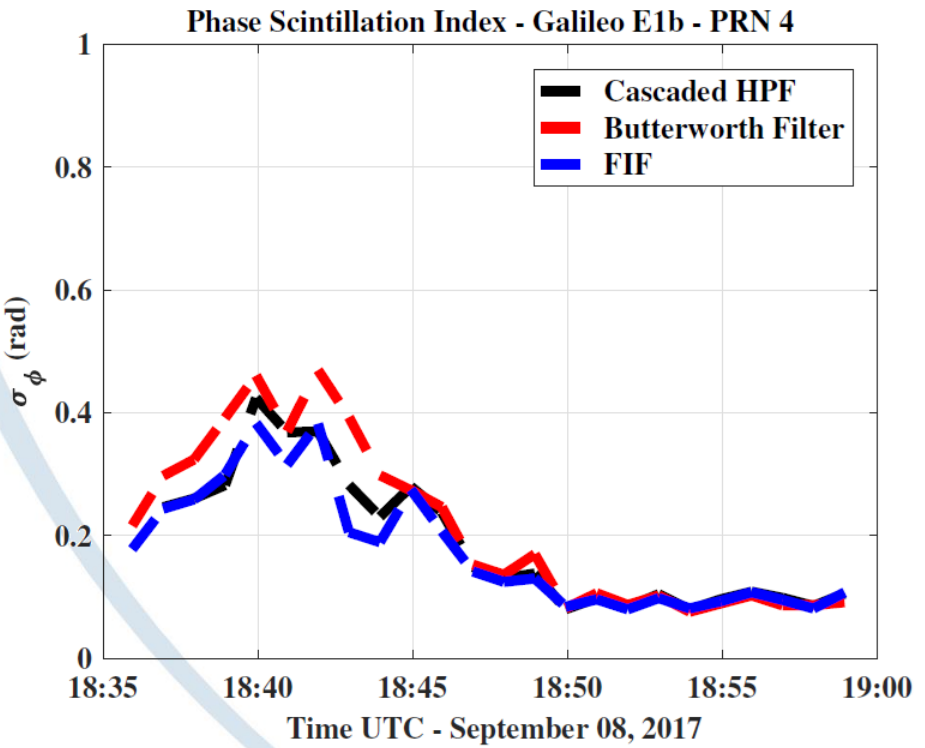
Phase Scintillation Index - Galileo E1b - PRN 4
Cascaded HPF
Butterworth Filter
FIF
σ φ (rad)
0
0.2
0.4
0.6
0.8
1
18:35
18:40
18:45
18:50
18:55
19:00
Time UTC - September 08, 2017

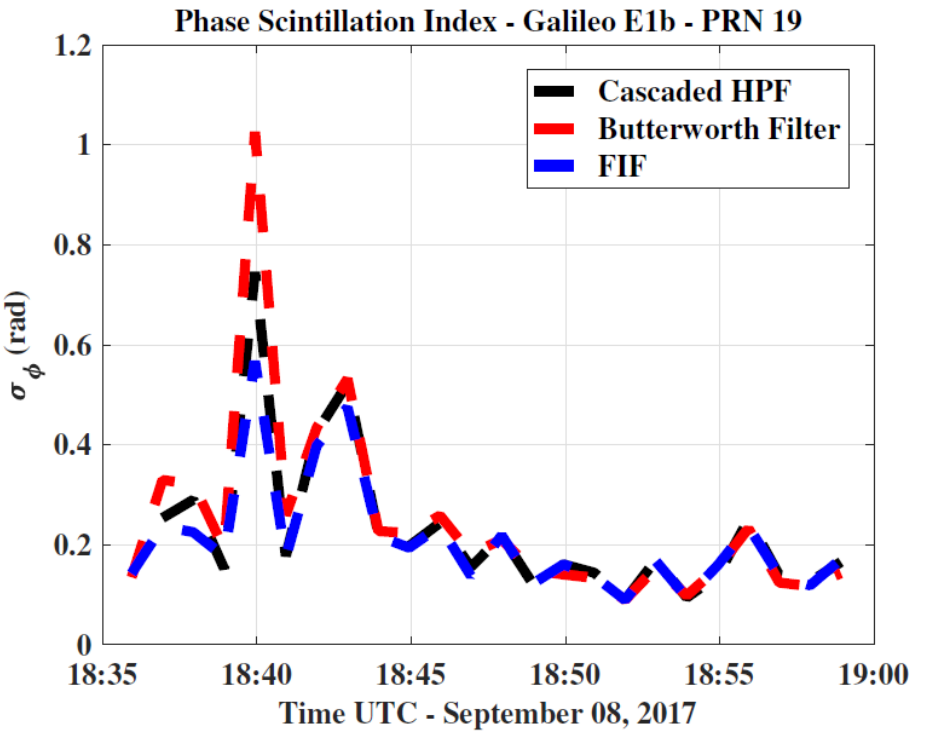
Phase Scintillation Index - Galileo E1b - PRN 19
Cascaded HPF
Butterworth Filter
FIF
σ φ (rad)
0
0.2
0.4
0.6
0.8
1
1.2
18:35
18:40
18:45
18:50
18:55
19:00
Time UTC - September 08, 2017

Results

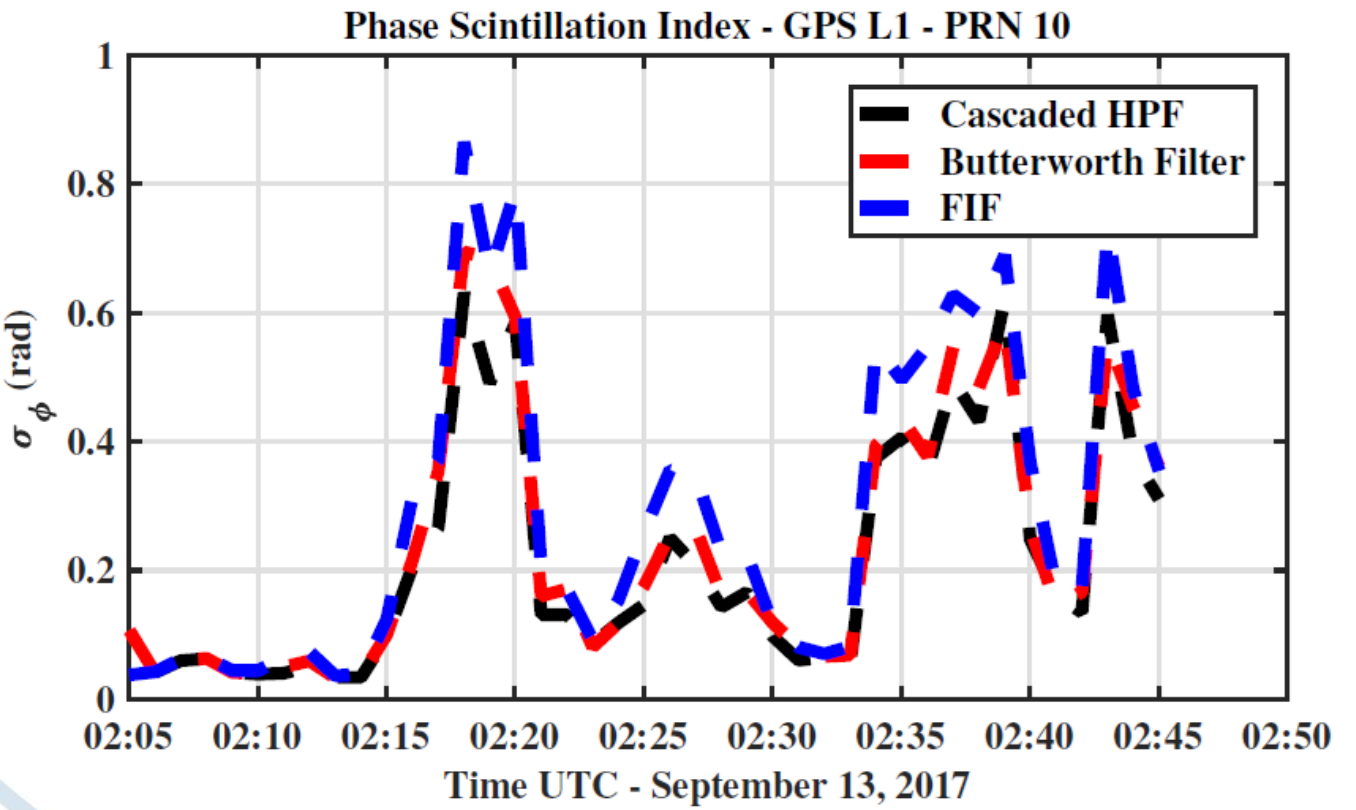
Phase Scintillation Index - GPS L1 - PRN 10
Cascaded HPF
Butterworth Filter
FIF
σ_ϕ (rad)
1
0.8
0.6
0.4
0.2
0
02:05
02:10
02:15
02:20
02:25
02:30
02:35
02:40
02:45
02:50
Time UTC - September 13, 2017

Summary and Conclusions

- A comparative study on different phase deterending techniques for ionospheric scintillation events in high and low latitudes in September 2017.
- Two commonly used filtering techniques - three cascaded second-order high pass filters and six order Butterworth filter conducted by cascading six first-order high pass Butterworth filters - versus a new filtering technique, the Fast Iterative Filtering (FIF).
- The experiments show that FIF is a reliable detrending technique for ionospheric phase scintillation estimation. The technique performs better if the preprocessing step is manipulated adequately and the cutoff frequency is set efficiently.
- For a future work an adaptive method shall be developed to adapt the technique to widespread data and to increase the FIF's performance. This may lead to a real-time ionospheric scintillation monitoring.

TREASURE
TRAINING RESEARCH AND APPLICATIONS NETWORK TO SUPPORT THE ULTIMATE REAL TIME HIGH ACCURACY EGNSS SOLUTION

Acknowledgments

This research work is undertaken under the framework of the TREASURE project (Grant Agreement N. 722023) funded by European Union's Horizon 2020 Research and Innovation Programme within Marie Skłodowska-Curie Actions Innovative Training Network.

Moreover, we would like to thank Alex Minetto for providing the collected datasets in Svalbard, Norway. We also wish to thank Dr. Giorgiana De Franceschi, Dr. Lucilla Alfonsi, Dr. Vincenzo Romano, and Dr. Claudio Cesaroni for the useful discussions supporting the work.

References

- Cicone, A. and Zhou, H. “Numerical analysis for iterative filtering with new efficient implementations based on FFT,” Submitted to Numerische Mathematik, arXiv:1802.01359.
- De Franceschi, G., Spogli, L., Alfonsi, L., Romano, V., Cesaroni, C., and Hunstad, I., “The ionospheric irregularities climatology over Svalbard from solar cycle 23,” Sci Rep, 9, 9232, 2019.
- Ghafoori, F. and S. Skone, “Impact of equatorial iono- spheric irregularities on GNSS receivers using real and synthetic scintillation signals,” Radio Sci.,50, pp. 294—317, 2015.
- Ghobadi, H., Spogli, L., Alfonsi, L., Cesaroni, C., Cicone, A., Linty, N., ... & Cafaro, M. (2020). Disentangling ionospheric refraction and diffraction effects in GNSS raw phase through fast iterative filtering technique. GPS Solutions, 24(3), 1-13.
- Linty, N., Minetto, A., Dovis, F., and Spogli, L., “Ef- fects of phase scintillation on the GNSS positioning error during the september 2017 storm at Svalbard,” Space Weather, 16, September 9, 2018, pp. 1317– 1329.
- McCaffrey, A. M., and Jayachandran, P. T., “Determi- nation of the refractive contribution to GPS phase scintillation of The Institute of Navigation (ION GNSS+), Tampa, Florida, September 2014, pp. 1190-1202.
- Mushini, S. C., Jayachandran, P. T., Langley, R. B., MacDougall, J. W., and Pokhotelov, D., “Im- proved amplitude- and phase-scintillation indices de- rived from wavelet detrended high-latitude GPS data,” GPS Solut, 16, pp. 363–373, 2012.
- Najmafshar, M., Skone, S., and Ghafoori, F., “GNSS data processing investigations for characterizing ionospheric scintillation,” In Proceedings of the ION GNSS+ 2014, Tampa, Florida, September 2014, pp. 1190-1202.
- Piersanti, M., Materassi, M., Cicone, A., Spogli, L., Zhou, H., and Ezquer, R. G. “Adaptive local itera- tive filtering: A promising technique for the analy- sis of nonstationary signals,” Journal of Geophysical Research: Space Physics, Vol. 123, No.1, 2018, pp. 1031–1046.
- Romano, V., Ghobadi, H., Spogli, L., Cafaro, M., Al- fonsi, L., Cicone, A., and Linty, N., “Disentangling ionospheric refraction and diffraction effects in GNSS raw phase through Fast Iterative Filtering technique,” In AGU Fall Meeting, December 2019.
- Van Dierendonck, A. J., Klobuchar, J., and Hua, Q., “Ionospheric scintillation monitoring using commer- cial single frequency C/A code receivers,” In Proceed- ings of the 6th International Technical Meeting of the Satellite Division of The Institute of Navigation (ION GPS), Salt Lake City, UT, September 1993, pp. 1333– 1342.
- Wernik, A. W., Secan, J. A., and Fremouw, E. J., “Ionospheric irregularities and scintillation,” Ad- vances in Space Research, Vol. 31, No. 4, 2003, pp. 971–981.

TREASURE
TRAINING RESEARCH AND APPLICATIONS NETWORK TO SUPPORT THE ULTIMATE REAL TIME HIGH ACCURACY EGNSS SOLUTION