32nd URSI GASS, Montreal, 19-26 August 2017

New type of spectrum plasma wave receiver using one-chip analog-digital mixed ASIC

Takahiro Zushi* (1), Hirotsugu Kojima (1), Mitsunori Ozaki(2), Yoshiya Kasahara(2), Satoshi Yagitani(2), Yuya Tokunaga(2), Tsubasa Takahashi(2), and Hiroshi Yamakawa(1)
(1) Research Institute for Sustainable Humanosphere, Kyoto University, Kyoto, Japan
(2)College of Science and Engineering, Kanazawa University, Kanazawa, Japan

Extended Abstract

Plasma waves are important observational targets for scientific missions investigating space plasma phenomena. In recent missions, fast Fourier transform (FFT) -based receiver is commonly used as a spectrum receiver of the plasma wave instrument. The FFT-based spectrum receiver has an advantage in that it can share the circuit with a waveform receiver. However, it has a disadvantage in the difficulty for adjusting its receiver dynamic range to the dynamic range of target signals in a wide frequency range (This disadvantage is also seen in waveform receivers), because the expected signal intensities of natural plasma waves strongly depend on their frequency ranges.

In order to overcome this disadvantage of an FFT-based spectrum receiver, we propose a new type of FFT-based spectrum plasma wave receiver that realizes the adjustable wide dynamic range to the expected signal intensities with keeping high time and frequency resolutions. The new receiver measures and calculates the whole spectrum by dividing the observation frequency range into three bands: bands 1, 2, and 3, which span 1 Hz to 1 kHz, 1 to 10 kHz, and 10 to 100 kHz, respectively. Figure 1 shows a block diagram of the receiver. The most important point in this block is the presence of band-limiting filters in the first stage. The cutoff frequencies of the band-limiting filters can be changed using an external control signal in order to change observation band. The sampling frequency, the cutoff frequency of the anti-aliasing filter, and the gain of the main amplifier also change synchronously with the change in the cutoff frequency of the band-limiting filter. This means that the observation frequency band can change stepwise over time by the external control signal. Since this new spectrum receiver requires many independent filters with different cutoff frequencies, the realization using discrete electronic parts is not realistic due to the strict limitation of the resource in a satellite. To reduce the size of the receiver extensively, we have attempted to implement the design of the necessary circuits of the plasma wave receiver on a one-chip CMOS device. The designed chip will consist of analog circuits, analog to digital converters (ADC), and digital circuits that are necessary for the onboard data processing.

Up to now, we successfully developed an analog circuit for the new receiver on a chip. The dimension of the analog circuit that contains various filters and amplifiers is 4.21 mm x 1.16 mm, and the power consumption is 36 mW. The frequency resolutions for bands 1, 2, and 3 were 3.2, 32, and 320 Hz respectively, and the average time resolution is 384 ms. These frequency and time resolutions are equivalent to those of conventional FFT-based receivers.

We conducted the implementation of the ADC with 14 bits and 33 MHz sampling rate at maximum on the same chip with analog circuits. Furthermore, we started to design the digital processing part such as the FFT and data compression on a same chip. In the present paper, we introduce our successful development of the analog circuits of the new spectrum receiver on a small chip as well as our further attempt for the realization of the analog-digital mixed chip for the plasma wave receiver.

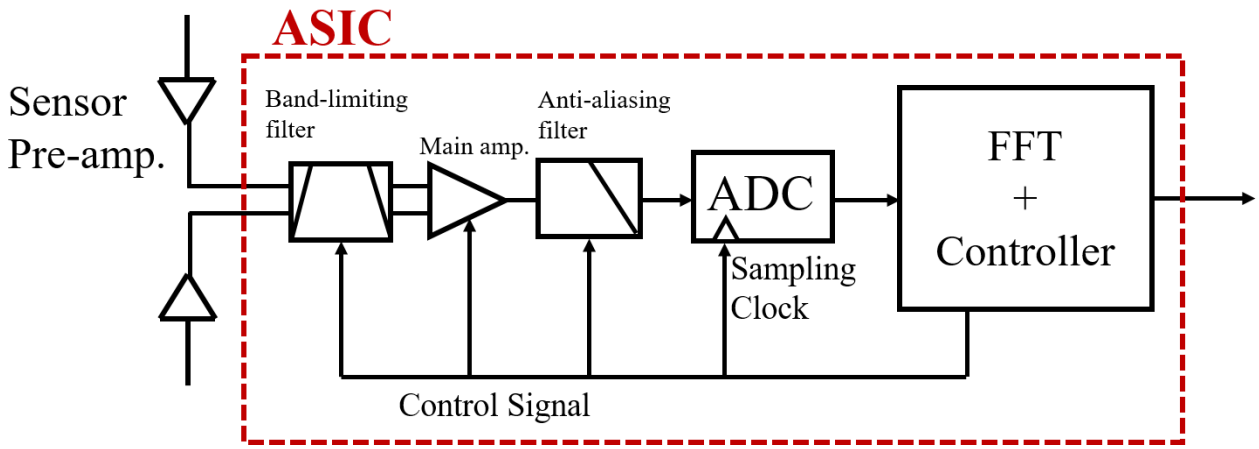

Figure 1. Block diagram of the new FFT-based spectrum receiver.