32nd URSI GASS, Montreal, 19-26 August 2017

Multi Step Ahead Prediction of Nighttime VLF Amplitude Signal for Low-, Mid-and High-Latitude Paths

H. Santosa(1,2) and Y. Hobara(1,3,4)
(1) Department of Computer and Network Engineering, The University of Electro-Communications, Tokyo, Japan
(2) Department of Electrical Engineering, Bengkulu University, Bengkulu, Indonesia
(3) Earth Environment Research Station, The University of Electro-Communications, Tokyo, Japan
(4) Center for Space Science and Radio Engineering, The University of Electro-Communications, Tokyo, Japan

Abstract

The electromagnetic field amplitude of the subionospheric Very Low Frequency (VLF) propagation is sensitive to the lower ionospheric conditions. Accordingly, VLF waves have been proposed to study and monitor the lower ionosphere (D/E region). In this paper, the NARXNN (Nonlinear Autoregressive with Exogenous Input Neural Network) is used as a method for predicting the daily nighttime mean amplitude of VLF transmitter signals indicating the ionospheric perturbation around the transmitter-receiver path. The NARXNN has a good accuracy in predicting time series data and thus are more suitable for dynamic modeling. The NARX constructed model, which was built based on daily input variables of various physical parameters with the time interval from 1 January 2011 to 4 February 2013 such as stratospheric and mesospheric temperatures, cosmic rays, total column ozone, F10.7, Kp, AE, and Dst indices. We used the constructed model to predict high- (NLK-CHF), middle- (NPM-CHF) and low-latitude (NWC-CHF) paths. As a result, the constructed models are capable of performing reasonably good 5-day ahead predictions of the daily nighttime of VLF electric field amplitude for NPM-CHF path with the Pearson correlation coefficient (r) of 0.84 and with Root Mean Square Error (RMSE) of 3.12 dB, NLK-CHF (r = 0.80, RMSE = 3.57 dB) and NWC-CHF (r = 0.79, RMSE = 2.60 dB). We conclude that the constructed NARX NN model is capable of predicting the VLF electric field amplitude variation for different latitude paths.

1. Introduction

Very Low Frequency (VLF) waves have been defined as a wave with a frequency from 3 kHz to 30 kHz. The VLF signals from powerful transmitters have been proposed to study and monitor the lower ionospheric conditions. The ionosphere is defined as the region of the atmosphere where, through various ionizing processes, there exist a significant number of free electrons and ions. It is the presence electrons and ions which effectively make the ionospheric medium conductor which reflects VLF waves propagating in the Earth-ionosphere waveguide. The variation on the ionospheric D/E-region leads to change in the propagation condition for VLF waves propagating sub-ionospherically. The ionospheric perturbation sources from below and above the ionosphere have contributions to the VLF amplitude variation e.g. geomagnetic storm [1], thunderstorm activity [2], solar eclipse [3], atmospheric changes [4], and etc.

The temporal characteristics of the daytime and nighttime ionosphere due to changes in the dominant chemical reactions and solar forcing have different conditions depend on the height of earth-ionosphere waveguide. In the daytime condition, the X-ray radiation and solar Lyman-alpha (121.6) dominates the D-region forming processes. Further, the ionosphere is rather stable, since the ionization rate is very significant during the daytime. In contrast in the nighttime condition, the solar Lyman-alpha scattered by the neural hydrogen in the geocorona becomes a major source of the ionization in the D-region [5]. In addition, the minor ionization sources in the low-middle latitudes are the meteoric and galactic cosmic ray [6]. Precipitating high-energy particles have also been invoked as a nighttime source of ionization [7]. The ionospheric perturbations during the storm time may be expected due to the forementioned high energy particle precipitations due to the Cyclotron resonance at the edge of the inner radiation belt [8]. The nighttime ionosphere is relatively unstable and is thought to provide an optimal condition to allow detection of comparatively weak ionospheric disturbances imposed on the VLF subionospheric propagation by various external forcing such as atmospheric changes, magnetic storms, earthquakes, thunderstorms, tsunami, etc.

Prediction of nonlinear time series is a useful method to evaluate characteristics of dynamical systems. Prediction of chaotic time series has been proposed in the study of signal processing, supply chain management, traffic flow, power load, weather forecast, Sunspot prediction and many others. Due to the importance of these fields, the interests in a robust technique to predict chaotic time series have been increased. Artificial Neural Networks (ANNs) have been employed independently or as an auxiliary tool to predict chaotic time series. Most applications of the neural network in the field of space science are used to predict the geomagnetic index and the ionospheric variations in F2-region. For example, prediction of F2 region critical frequency (foF2) is based upon feedforward neural networks [9]. In contrast, the NARX neural network (NARX NN) used in this study has a good learning capability and generalization performance [10] and thus is more suitable for dynamic modeling [11]. Previously, NARX NN has used for predicting magnetic storm intensity [12], geomagnetic K and Kp indices [13] in

geoscience. Most recently, the one-step ahead prediction has been developed for predicting the VLF electric field amplitude in midlatitude path [14].

NARX NN can be used for two objectives: one-step ahead (OSA) prediction and long-term or multi-step ahead (MSA) prediction tasks. In other words, the input regressor contains only actual sample points of the time series. If one is interested in a wider prediction horizon, the output of the model should be feedback to the input regressor for a fixed but finite number of time steps in multi-step ahead prediction. In this case, the multi-step ahead prediction task becomes a dynamic modeling task, in which the ANN model acts as an autonomous system, trying to recursively emulate the dynamic behavior of the system that has generated the nonlinear time series.

In this work, we constructed a powerful tool for predicting daily nighttime mean of the subionospheric VLF electric field amplitude from 1-day to 5-day ahead for high-, middle- and low-latitude path by using NARX NN model. In this regards, there could be several indices describing VLF amplitude in the nighttime such as stratospheric and mesospheric temperatures, cosmic rays, total column ozone, F10.7, Dst, AE, and Kp-indices. To find the most significant parameters for the prediction model, we analyzed past VLF nighttime amplitude over the time period from 1 January 2011 to 31 December 2013 by using NARX NN.

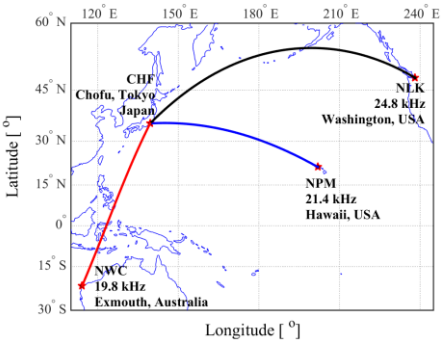

Figure 1. Geographical locations of the VLF transmitters and receiving site in Chofu (CHF) Tokyo, Japan. The solid curves indicate the Great Circle Paths (GCP) between the transmitters and receiver (NLK-CHF-black curve, NPM-CHF-blue curve, and NWC-CHF-red curve).

2. Observational Data

In this work, the output of the prediction is based on the data recorded by the VLF receiver located in Chofu (Japan). These VLF/LF receivers continuously measured the electric amplitude of signals from the three powerful transmitters such as Hawaii, USA (NPM, 21.4 kHz, geographic latitude: 21.4°N, longitude: 158.1°W), Washington, USA (NLK, 24.8 kHz, geographic latitude: 48.2°N, longitude: 11.9°W), and North West Cape, Australia (NWC, 19.8 kHz, geographic latitude: 21.8°S, longitude: 114.2°E). Figure 1 shows Great Circle Path (GCP) between the VLF transmitters and receiver. Further, we used the daily nighttime mean value of the VLF electric field amplitude data with a temporal resolution of 2-min. The VLF data was analyzed over the time interval from 1 January 2011 to 31 December 2013.

In our model, a daily mean of the nighttime stratospheric temperature data in Kelvin at an altitude of 30 km (± 1 km) was obtained from the Atmospheric Infrared Sounder (AIRS) level 3 data (http://giovanni.gsfc.nasa.gov/giovanni/). Further, we used the nighttime mean cosmic ray data from the Magadan cosmic ray station (60.04°N, 151.05°E) as a one point per day. This station is operated by the Institute of Cosmophysical Research and Radio Propagation Wave, part of the Russian Academy of Sciences (http://cr0.izmiran.ru/mgdn/).

The nighttime mean data of the total column ozone used in the NARX NN model was obtained from the Ozone Monitoring Instrument (OMI) aboard on the NASAs AURA spacecraft (http://disc.sci.gsfc.nasa.gov/Aura/). The Dst or disturbance storm time index is a measure of geomagnetic activity used to assess the severity of magnetic storms and the data was obtained from the World Data Center (WDC) for geomagnetism, Kyoto, Japan (http://wdc.kugi.kyoto-u.ac.jp/dstae/).

The Auroral Electrojet (AE) index is derived from geomagnetic variations in the horizontal component observed at selected 12 observatories along the auroral zone in the northern hemisphere. In our model, this data was used as one of the inputs and the data was obtained also from the WDC. The Kp index was defined as the mean value of the disturbance levels in the two horizontal field components from 13 observatories located in the sub-auroral zone.

The daily nighttime mean of mesospheric temperature data in Kelvin at height of 80-90 km was obtained from the Sounding of the Atmosphere with Broadband Emission Radiometry (SABER) on the NASA TIMED (Thermosphere-Ionosphere-Mesosphere Energetics and Dynamics) satellite data (http://saber.gats-inc.com/). Finally, the solar cycle activity namely solar radio flux F10.7 cm as an input in the build model. This data was obtained from the Interplanetary Magnetic Field (IMF) and plasma data from the Advanced Composition Explorer (ACE) spacecraft (http://omniweb.gsfc.nasa.gov/ form/).

3. VLF Electric Field Amplitude Modeling by using NARX NN

A NARX is a nonlinear important class of discrete-time non-linear systems that can be mathematically represented in equation (1) [15].

$$y(k+1) = F[(y(k), y(k-1), \dots, y(k - d_y + 1); u(k), u(k-1), \dots, u(k - d\_u) + 1)] \quad (1).$$

where $u(k) \in \mathbb{R}$ and $y(k) \in \mathbb{R}$ denote, respectively, the input and output of the model at time step k, while $d_u \geq 1$ and $d_y \geq 1$, are the input-memory and output memory orders, respectively. $F[.]$ is nonlinear tangent sigmoid function.

NARX NN is a recurrent dynamic network with feedback connections enclosing the layers along with embedded memory (tapped time delay). It is a combination of a multilayered perceptron, a recurrent network, and a feedforward backpropagation network.

This network consists of three main layers namely input layer, hidden layer, and output layer. The input layer consists of the current and previous inputs and outputs. These are fed into the hidden layer. The hidden layer consists of one or several neurons resulting in a nonlinear mapping of affine weighted combination of the values from the input layer. The output layer consists of an affine combination of the values from the hidden layer. In this network, the dynamical order of inputs and outputs and number of neurons in each layer are pre-determined.

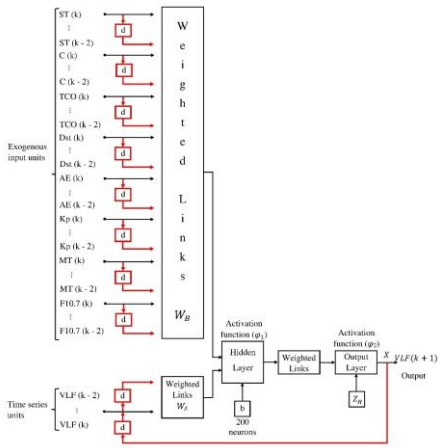

Figure 2. NARX NN OSA prediction architecture for VLF electric field amplitude.

In this paper, the NARX NN, where the exogenous inputs (u) are stratospheric temperature, cosmic rays, total column ozone, dst index, AE index, Kp index, mesospheric temperature, and F10.7 have been implemented using Levenberg Marquardt Neural Network (LMANN) Algorithm [35]. The VLF electric amplitude field was used as the output (y). Both inputs and output have a memory of 3-day from the given day. The NARX NN consist 200 neurons in the hidden layer each utilizing tangent sigmoid activation function. The NARX NN model for one-step ahead prediction has been diagrammatically shown in Figure 2.

4. The Multi-Step Ahead Prediction of NARX NN model

The NARX NN constructed a model is trained to perform a one-step ahead prediction and when predicting n steps ahead, the first step by applying the NARX NN OSA model. Subsequently, the independently predicted value for each input are used as part of the new input variables for predicting the next step. The input data set increase with one more input every time step. The complexity of the model increases linearly with more inputs and prediction error are fed into the NARX NN model. In our work, the constructed model based on the NARX NN one-step ahead prediction with 3 delay time and 200 neurons using LMANN algorithm [14] devised a NARX NN multi-step ahead prediction.

5. Results

In this work, the dataset for OSA training was chosen from 1 to 766 days of the total data (1096 days) and for validation was used the remaining dataset (767 – 1096 days). For the learning purpose, the network training function that updates the weight and bias values according to Levenberg-Marquardt optimization was modified to include the regularization technique. It minimizes a combination of squared errors and weights, then the correct combination to produce a network which generalizes well. The training was stopped when the lowest RMSE between each data set and its prediction were reached. The early stopping technique used in this study involves simultaneous training and validation. Further, this technique to prevent overfitting during the network training.

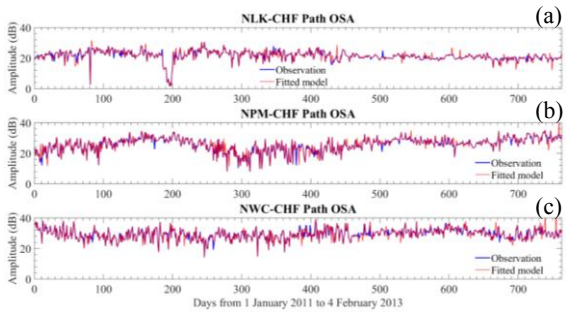

Figure 3. The fitted model predictions of NARX NN model over the time interval from 1 January 2011 to 4 February 2013. (a) NLK-CHF path, (b) NPM-CHF path, and (c) NWC-CHF path (VLF observation-blue; The fitted model-red).

The model prediction results for each path represented by Figure 3 (a-c). The fitted model (inside the training period) with the time interval from 1 January 2011 to 4 February 2013 show in red curve and observation in blue curve. As a result, the fitted model has a good agreement with the original data for each path. The constructed model worked well for prediction as represented by Pearson correlation coefficient (r) is high and RMSE is small. The correlation coefficient for NLK-CHF, NPM-CHF and NWC-CHF paths are 0.936, 0.951 and 0.913 and RMSE 1.18 dB, 1.45 dB and 1.50 dB respectively.

After implementing NARX NN constructed model for OSA prediction based on data set inside training period, we demonstrate MSA prediction. The same model with 3-day of input-memory and 200 neurons in the hidden layer using LMANN algorithm is used to initial structure of MSA prediction model. Since the DirRec strategy is applied in this study, the prediction for the next step will compute new model structure. The predicted value use as a part of the new input for training the NARX NN and predicting the next step. We continue this manner until the entire horizon is predicted. Furthermore, the build model is used for

performing 5-day ahead prediction with 120-day data sets from 21 August 2013 to 18 December 2013 (outside training period). To represent the predicting accuracy of NARX NN MSA prediction models, the curve plot of the observed data (blue curve) versus predicted value of 5-day ahead in the 120-day data sets are shown in Figure 4 (a-c) for NLK-CHF, NPM-CHF, and NWC-CHF paths respectively. As a result, almost for all VLF paths of the predicted value suitably follow the observed value as indicated by correlation coefficient for each path of 0.80, 0.84 and 0.79 receptively. Further, the error prediction show in RMSE of 3.57 dB (NLK-CHF), 3.12 dB (NPM-CHF) and 2.60 dB (NWC-CHF). The proposed model shows that the ability to predict 5-day ahead is good and its RMSE is also rather small.

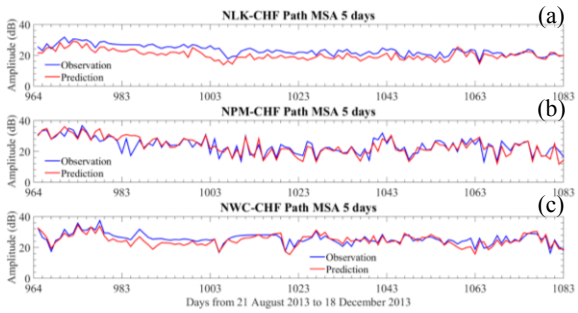

Figure 4. Multi Step (5-day) Ahead (MSA) predictions of NARX NN model over the time interval from 21 August 2013 to 18 December 2013 with 3-day memory and 200 neurons outside training period by using LMANN algorithm. (a) NLK-CHF path, (b) NPM-CHF path, and (c) NWC-CHF path (VLF observation-blue; Prediction-red).

6. Conclusions

Predicting a time series with many steps into the future is a challenging problem because of the larger prediction horizon and higher uncertainty. In this paper, we presented the one-step and multi-step ahead predictions of the daily nighttime mean of VLF electric field amplitude on high-, middle- and low-latitudes by using NARX NN dynamic model. In the high-latitude path, the Dst index previous day before has the most influential parameter to VLF amplitude variation. Stratospheric temperature from 2-day before has the most significant contribution in the middle-latitude path. The difficult path is NWC-CHF because the VLF amplitude itself becomes the most significant factor. The constructed model can well predict the VLF amplitude 1-day ahead with the average value for 3 paths of $r = 0.93$ and RMSE = 1.74 dB. Further, the prediction performance for 5-day ahead is reasonably good even the data sets outside the training period with the average value for all paths of $r = 0.81$ and RMSE = 3.09 dB. In summary, the time series VLF amplitude NARX NN model has been validated for one-step and also multi-step ahead predictions. The performance of the proposed predicting method in the term correlation coefficient and error index is good.

7. Acknowledgements

The author would like to thank the AURA/OMI, AIRS mission scientists, World Data Center (WDC) for geomagnetism Kyoto and Magadan cosmic ray station for the production of the data used in this research effort. VLF data used in this analysis are available upon request made to Y. H. (hobara@ee.uec.ac.jp).

8. References

1. K. Tatsuta, Y. Hobara, S. Pal, and M. Balikhin, "Sub-ionospheric VLF signal anomaly due to geomagnetic storms: a statistical study," *Ann. Geophys.*, vol. 33, no. 11, pp. 1457–1467, 2015, doi:10.5194/angeo-33-1457-2015.
2. Y. Hobara, N. Iwasaki, T. Hayashida, M. Hayakawa, K. Ohta, and H. Fukunishi, "Interrelation between ELF transients and ionospheric disturbances in association with Sprites and Elves," *Geophys. Res. Lett.*, vol. 28, no. 5, pp. 935–938, 2001, doi:10.1029/2000GL003795.
3. D. Inui and Y. Hobara, "Spatio-temporal characteristics of sub-ionospheric perturbations associated with annular solar eclipse over Japan: Network observations and modeling," in 2014 XXXIth URSI General Assembly and Scientific Symposium (URSI GASS), pp. 1–3, IEEE, doi:10.1109/URSIGASS.2014. 6929555.
4. S. Pal and Y. Hobara, "Mid-latitude atmosphere and ionosphere connection as revealed by very low frequency signals," *J. Atmos. Solar-Terrestrial Phys.*, vol. 138–139, pp. 227–232, 2016, doi:10.1016/j.jastp.2015.12.008.
5. P. M. Banks and G. Kockarts, "Effects of Diffusion in the Heterosphere," *Aeronomy*, pp. 32–63, 1973, doi:10.1016/B978-0-12-077802-7.50007-5.
6. T. A. Potemra, "Ionizing radiation affecting the lower ionosphere, in ELF-VLF Radio Wave Propagation," pp. 21–37, Springer, Dordrecht, Neth., 1974, doi:10.1007 /978-94-010-2265-1_2.
7. L. Thomas and M. Bowman, "Model studies of the D-region negative-ion composition during day-time and night-time," *J. Atmos. Terr. Phys.*, vol. 47, no. 6, pp. 547–556, Jun. 1985, doi:10.1016/0021-9169(85)90037-6.
8. V. K. Jain and B. Singh, "Storm-time precipitation of resonant electrons at the lower edge of the inner radiation belt," *Planet. Space Sci.*, vol. 38, no. 6, pp. 785–790, Jun. 1990, doi:10.1016/0032-0633(90)90037-Q.
9. M. Nakamura, T. Maruyama, and Y. Shidama, "Using a neural network to make operational forecasts of ionospheric variations and storms at Kokubunji, Japan," *Earth Planets Space,* 59(12), 1231–1239, doi:10.1186/ BF03352071.
10. T. Lin, B. G. Horne, P. Tiňo, and C. L. Giles, "Learning long-term dependencies in NARX recurrent neural networks," *IEEE Trans. Neural Networks*, vol. 7, no. 6, pp. 1329–1338, 1996, doi: 10.1109/72.548162.
11. N. Bhat and T. J. McAvoy, "Use of neural nets for dynamic modeling and control of chemical process systems," *Comput. Chem. Eng.*, vol. 14, no. 4–5, pp. 573–583, 1990, doi:10.1016/0098-1354(90)87028-N.
12. L. Cai, S. Y. Ma, and Y. L. Zhou, "Prediction of SYM-H index during large storms by NARX neural network from IMF and solar wind data," *Ann. Geophys.*, vol. 28, no. 2, pp. 381–393, 2010, doi:10.5194/angeo-28-381-2010.
13. J. Uwamahoro and J. Habarulema, "Empirical modeling of the storm time geomagnetic indices: a comparison between the local K and global Kp indices," *Earth, Planets Sp.*, vol. 66, no. 1, p. 95, 2014.
14. H. Santosa and Y. Hobara, "One Day Prediction of Nighttime VLF Amplitudes using Nonlinear Autoregression and Neural Network Modeling," *Radio Sci.*, Vol. 52, 2017, doi:10.1002/2016RS006 022.
15. S. Chen, S. A. Billings, and W. Lou, "Orthogonal least squares methods and their application to non-linear system identification," *Int. J. Control*, vol. 50, no. 5, pp. 1873–1896, Nov. 1989, doi:10.1080/00207178908953 472.