2D modeling of Bulk Current Injection Probe and validation with measurements

Mor S. DIOP*(1), Edith CLAVEL(1), Hassan CHEAITO(2), Christian VOLLAIRE(2), Enrico VIALARDI(3)
(1) G2Elab, 21 Av. des martyrs CS 90624, Grenoble, FRANCE, mor-sokhna.diop@g2elab.grenoble-inp.fr
(2) Ampère, 36 Avenue Guy de Collongue, 69134 Écully, FRANCE, hassan.cheaito@doctorant.ec-lyon.fr
(3) Altair, 15 Chemin de Malacher, 38246 Meylan, FRANCE, evialardi@altair.com

Abstract

Electronic Equipment designed to be loaded onto an aircraft must be certified in accordance with established EMC standards. This paper is focused on section 20 of RTCA-DO160 which refers to conducted susceptibility in aeronautics. Since equipment can succeed or not in qualification test, aim is to be able to predict these levels of disturbance for limiting costs and time design. Moreover, aircraft manufacturers are mostly looking for precise answers about the sensitivity and reproducibility of these tests. In this sense, a 2D model of probe coupling to wires is developed in this work.

1. Introduction

Electronics equipment intended to be integrated in aircrafts are subjected to normative requirements. EMC (Electromagnetic Compatibility) qualification tests are implemented according to standard specifications [1]. Among them, BCI test, dedicated to conducted immunity, is one of most binding in terms of costs and disparities on test results for identical configurations. In a detailed analysis approach about origins of these dissimilarities, the aim is to be able to predict EMC disturbances levels numerically.

In previous works, spice modeling is mostly found for predicting disturbance thru DUT [2, 3, 4]. These models are really complex to elaborate when aeronautic cabling is used.

This work will focus on 2D modeling of BCI probe with two conductors coupling like secondary winding. After brief presentation of 2D description, complex permeability model will be shown. At the end, numerical model will be validated by measurement.

2. Modelling procedure

BCI test is used to assess conducted immunity of electronic equipment embedded in aircraft. The test procedure is specified in section 20 by D0160 standard (see Fig.1). The first step always consists in a calibration phase which allows reproducing injected current through wires according to categories given by standards.

.

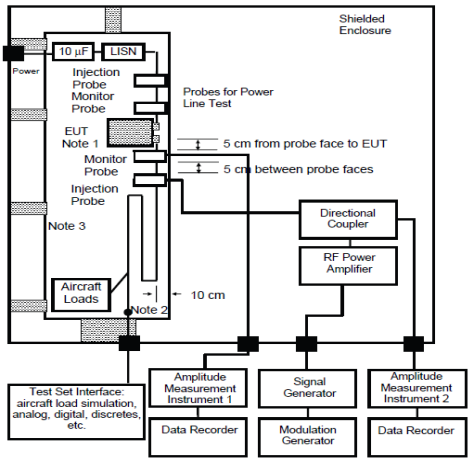

Figure 1. Conducted Susceptibility test setup [1]

This qualification test is very binding; for the same test configuration, disparities can occur on results. It is therefore important to explain the origin of these uncertainties and to identify the most sensitive parameters. Numerical modeling shows all its interest for evaluating them. In the literature, many papers propose a Spice modeling of BCI probes. These models can be implemented with low calculation time. Their main drawback is the difficulty to take into account phenomena like skin effect, proximity effect, and propagation. A much more elaborated model would permit to take into account complexity of phenomena involved in the test. Indeed, we have developed a 2D model using FEM method. Thus, it will be necessary to model the BCI injection probe, wires and DUT. In this impetus to implement a virtual test device, we will begin with studying the coupling between wire and RF transformer with 2 conductors under injection probe.

Then this work is focused on 2D modeling of BCI probe FCC-F120 8G. This RF transformer allows disturbing EST thru coupling perturbation via wires. One of challenges is intrinsic physical characteristics of the probe are not given. These parameters are really important in order to define first order Debye model of relative magnetic permeability of the ferrite core [5][6]. Approximation will be made by using known characteristics of probes available in literature.

For calculation of the complex permeability of the magnetic ferrite core, some steps must be respected:

- Measure of the reflection parameter S11 at the input of the current probe
- Deduce probe's input impedance Z11 (f) from S11, as in (1)
- Calculate the actual complex permeability of the magnetic ferrite core [7]

Injection probe's 2D modeling is done with Flux2D. Thus it's necessary to define precisely some geometric parameters:

- Injection zone
- Current injection probe's sizes
- Secondary winding's sizes

And so a physical description:

- Winding's material (copper)
- First order Debye's model for reproducing ferrite core's frequential behavior.

$$Z_{11} = 50 \times (1 + S_{11}) / (1 - S_{11}) \qquad (1)$$

$$\hat{\mu}_r(w) = \mu_\infty + (\mu_s - \mu_\infty) / (1 + j \times w \times \tau) \qquad (2)$$

With

$$\mu_\infty = 0.622$$
$$\mu_s = 600$$
$$\tau = 4.2.10^{-10} s$$

For validating 2D model of RF transformer, a comparison will be done between simulations and measurement for reflection S_{11} and transmission S_{12} parameters of setup test.

3. Relative magnetic complex permeability of ferrite Calculation and first order corresponding Debye's model

As mentioned previously, Debye's model of FCC F120 8G probe's ferrite core is deduced from two calculations steps. First one is approximation of the RF current transformer's intrinsic parameters. Second step is evaluation of the input impedance Z_{11} with reflection parameter S_{11} measurement thru VNA. Fig.2 shows evolution of corresponding first order Debye model of ferrite core which isn't linear in the BCI frequencies band. This relative magnetic permeability will be assigned to magnetic ferrite core's region in Flux2D.

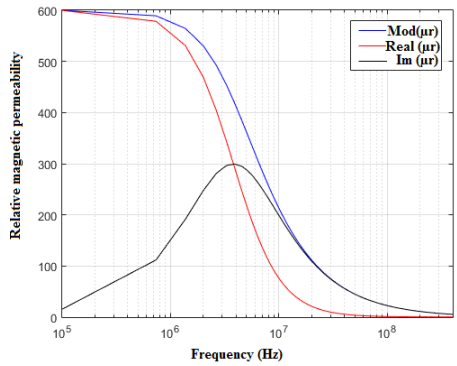

Figure 2. First order Debye model of relative magnetic permeability

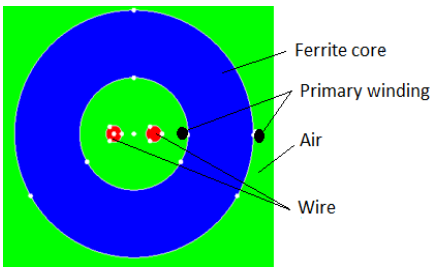

Figure 3. 2D model of the injection probe

4. Finite Element Method Modeling approach

In this part, finite elements 2D model of the RF transformer will be presented (see Fig.3).
Five regions have been introduced to define studied set-up:

- Infinite box
- Air region
- Conductors
- Primary winding
- Magnetic ferrite core

Physic characteristics of Ferrite core region is constituted by first order Debye model previously presented. Modeling method in Flux2D software ® is based on FEM (Finite Element Method). First, a model with only one conductor is developed. After validation, two conductors are inserted under the injection probe. 2D models will be compared with Spice model and measurements.

5. Probe & wire coupling modellings

In this part, BCI probe modeling and validation with measurement of scattering parameters will be presented

5.1 One clamped conductor

A 50cm copper conductor is placed at secondary winding of RF transformer and 50 Ohm load is connected to the extremity which isn't used by VNA (see Fig.4 and Fig.5). Z_{11} (f) (with the presence of secondary winding) has been deduced from reflection coefficient S_{11} measurement, as in (1).

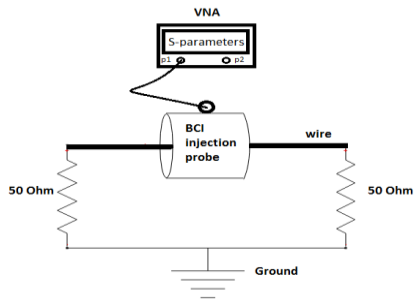

Figure 4. BCI injection thru one wire

Figure 5. One coupling wire

Results are compared with a SPICE model and measurements on Z_{11} (f) (see Fig.6).

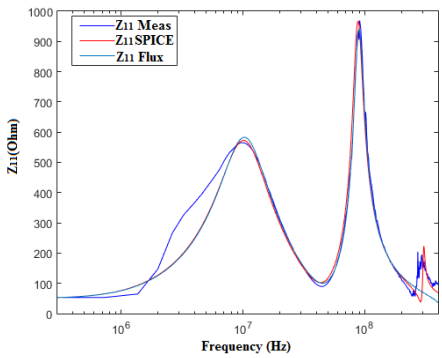

Figure 6. Comparison between simulation and measurement on input impedance Z_{11} of FCC F120 8G probe

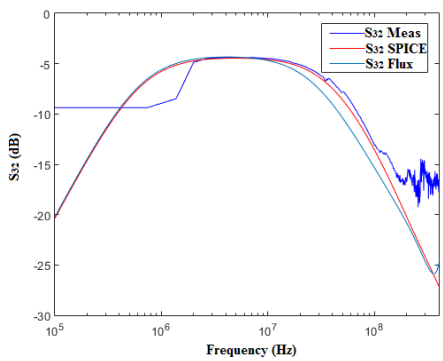

Figure 7. Comparison between simulation and measurement on transmission parameter S_{32}

Low frequency deviation is due to fact that measurement is made with a VNA which did not allow a large number of points in this frequency range (see Fig.7). For high frequency, beyond 250 MHz-300 MHz, difference is due to a bad modeling of connectors at ends of the conductor. Compensation was not made during VNA calibration steps.

5.2 Two clamped conductors

Fig.8 shows injection through two clamped conductors. Comparison between simulation and measurement on Z (f) gives satisfying results (see Fig.9).

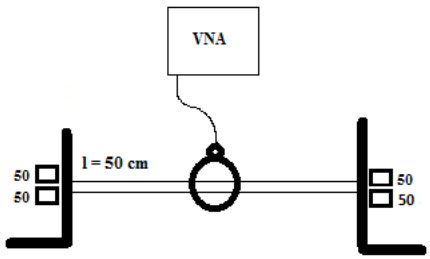

Figure 8. Injection thru two clamped conductors

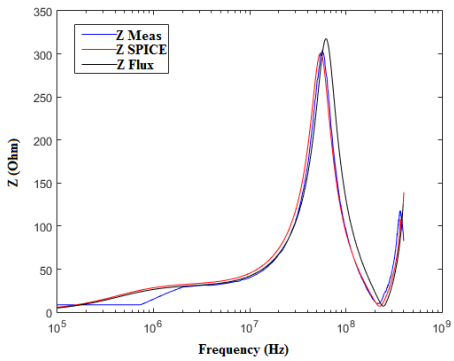

Figure 9. Comparison between simulation and measurement on input impedance Z of FCC F120 8G injection probe

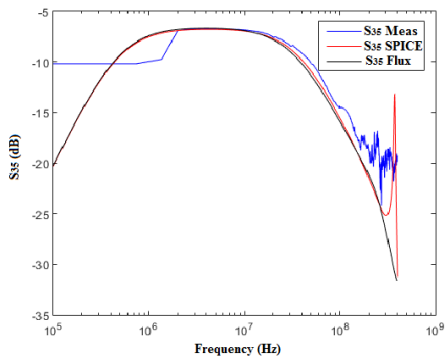

Figure 10. Comparison between simulation and measurement on transmission parameter S_{35} of FCC F120 8G injection probe

Fig.10 shows good correlation between simulation and measurement on transmission coefficient. Injection is done at input of BCI probe and measurement on one of terminals conductors. Unused terminals are connected to 50 Ohms loads.
Low and high frequency deviations can be explained as previously. This difference does not affect robustness of this developed model.
Results are satisfactory on these two study cases. This model allows evaluating easily uncertainties related to the position and section of secondary winding which can affect considerably test results [8, 9].

In a BCI test, this model may well be used as an EMC perturbation generator. Good modeling of wires and DUT will be necessary for convincing results [10, 11, 12].

6. Conclusion

In this work, one can find that 2D modeling of the FCC F120 8G current injection probe is validated. This model is developed without knowledge of intrinsic information of RF transformer. An approximation is thus made about evaluation of these intrinsic parameters. Finite Element modeling with one then two wires under the probe gives satisfying results. In order to progressively elaborate models of the different parts involved in complete BCI injection, it would be interesting to make a model of injections on a number of conductors greater than 2. A 3D model could be developed for more precision, with respect to specifications noticed in section 20 of DO160 standard, if used software allows making calculations in a reasonable time.

7. Acknowledgements

This study is part from SIMUCEDO project selected for funding at 17th FUI call. It contributes to the virtualization of BCI test.

8. References

1. RTCA DO160 – *Environmental conditions and test procedures for airborne equipment* - Section 20: Radio Frequency Susceptibility (Conducted) / Bulk current injection (BCI)

2. Lafon, Frédéric, Y. Belakhouy, and François De Daran. "Injection probe modeling for bulk current injection test on multi conductor transmission lines." *IEEE Symp. on Embedded EMC Proceedings, Rouen, France*. 2007.

3. Kwak, S., Jo, J., Noh, S., Lee, H., Nah, W., & Kim, S. "Bulk current injection test modeling using an equivalent circuit for 1.8 V mobile ICs." *2012 Asia-Pacific Symposium on Electromagnetic Compatibility*. IEEE, 2012.

4. Oganezova, I., Bunlon, X., Gheonjian, A., Chahine, I., Khvitia, B., & Jobava, R. "A new and easy approach to create BCI models." *2014 IEEE International Symposium on Electromagnetic Compatibility (EMC)*. IEEE, 2014.

5. L. Di Renzo, Flavia Grassi and S. A. Pignari, "FIT modeling of injection probes for bulk current injection.", *Proc.ACES,Verona,* Italy, March 19-23, 2007

6. F.Grassi, F.Marliani, S.A.Pignari, *"SPICE Modeling of BCI Probes Accounting for the Frequency-Dependent Behavior of the Ferrite Core"*, XIXth General Assembly of International Union of Radio Science (URSI), Chicago, IL, USA, 2008.

7. Grassi, Flavia, Filippo Marliani, and Sergio A. Pignari. "Circuit modeling of injection probes for bulk current injection." *IEEE Transactions on Electromagnetic Compatibility 49.3 (2007): 563-576.*

8. Diop, M. S., Clavel, E., Cheaito, H., Vollaire, C., & Vialardi, E. (2016, July). "Evaluation numérique des incertitudes liées au test BCI (Bulk Current Injection) dans le cas de plusieurs conducteurs dans la pince." In *CEM 2016, Rennes, FRANCE*.

9. Diop, M. S., Clavel, E., Cheaito, H., Vollaire, C., & Vialardi, E. (2016, April). "Evaluation of uncertainties related to BCI (Bulk Current Injection) tests." In *EMF 2016 (10th International Symposium on Electric and Magnetic Fields)*.

10. H. Cheaito, Mor S. DIOP, Marwan Ali, E. Clavel, C. Vollaire, Léonce Mutel,"Susceptibility versatile model for complex System for Bulk Current Injection (BCI test)." In Electromagnetic Compatibility (EMC), 2016 IEEE International Symposium on (pp. 513-518).IEEE.

11. Cheaito, H., Diop, M. S., Clavel, E., Ali, M., & Vollaire, C. (2016, July). "Modélisation d'équipements sous test lors d'un essai Bulk Current Injection (BCI) pour différentes configurations." In *CEM 2016*.

12. Cheaito, H., Diop, M. S., Ali, M., Clavel, E.,Vollaire, C, MUTEL, L., "Virtual Bulk Current Injection : Modelling EUT for several set-ups and quantification of CM to DM conversion." *IEEE Transactions on Electromagnetic Compatibility, November 2016.*