A Ultra-Wideband Quarter Wavelength Folded Half E Patch Antenna

Zhiwei Shi(1,2), Anyong Qing*(1,2)
(1) School of electrical engineering, Southwest Jiaotong University, Chengdu, 610031, China
(2) School of physical Electronics, University of Electronic Science and Technology of China, Chengdu, 611731, China

Abstract

A novel Ultra-wideband quarter wavelength folded half E patch antenna is presented in this paper. By combining half structure technique and folded patch technique, a Ultra-wide impedance broadband patch antenna with small geometric size is created. The impedance bandwidth of this patch antenna is about 55.7%. The antenna size is about the quarter wavelength corresponding to lowest operating frequency. The simulated impedance bandwidths, radiation patterns, radiation efficiencies and gains of this antenna are shown and discussed in the paper.
Index Terms - small size; Ultra-wideband; patch antenna.

1. Introduction

The Microstrip patch antennas (MPA) have the advantages compared to the traditional microwave antennas such as low profile, light weight low cost. The ultra-wideband (UWB) frequency ranges from 3.10 GHz to 10.6GHz and UWB communication system is attracting more and more attention because of its advantages such as low power consumption, high data transmission rate as in the multimedia communications and low interference to other systems etc. It is possible that UWB will become a popular next-generation, short-range wireless connection technology. Meanwhile, the small size communication system is always desirable. In many applications the requirements on both bandwidth and physical size are quite stringent [1]. Different types of slots like L, U, triangular etc. have been proposed to achieve dual band frequencies for WLAN/WiMAX applications [2-4]. The shorting wall and the shorting pin are two common employed techniques in designing small patch antennas. The broadband u-slot patch with a shorting wall or a shorting pin were reported in [5-7]. A novel technique that improves the performance of a conventional quarter-wave patch antenna is proposed in [8,9]. It is used folded patch to enlarge the impedance bandwidth. The same technique is also applicable to dual-band and wideband applications [10,11], albeit more complicated geometrical configurations. Another size reduction technique is proposed in [12]. The size of a u-slot patch antenna is halved by removing half of the patch area along the line of symmetry. Defected ground structures (DGS) are also preferred to reduce the design size [13,14]. The shorting wall and shorting pin techniques also has been applied in half patch antennas [15-17].

In this paper, a new kind of small UWB antenna is proposed. The 3-D size of proposed patch antenna is 12mm×7.5mm×7mm.It is about $0.252\lambda_0\times0.157\lambda_0\times0.147\lambda_0$, where λ_0 is the free space wavelength at the centre operating frequency. The 2:1 VSWR bandwidth of this antenna is from 4.41GHz to 8.18Ghz with omni directional radiation and stable gain throughout the band.

2. Modeling Structure

It is known that increasing the thickness of the substrate can lower the Q-factor leaky resonator and it will increase the impedance bandwidth. However, the thicker the substrate of the antenna, the longer the coaxial probe will be used, and thus, more probe inductance will be introduced, which limits the impedance bandwidth. Using folded patch can solve the problem. In addition, for some antenna structures, such as the rectangular with U-slot and E-shaped, when viewed from the top, a double resonance can be easily obtained. These are the main reasons for achieving a wide impedance bandwidth for these patch antenna. Fig. 1 shows the prototype of the proposed patch antenna. The half structure technique was applied to the quarter wavelength folded E-shaped patch antenna. Due to the symmetry of the current distribution, removing half of the patch does not apparently alter the current paths and the resonant behavior. The antenna is designed with half E-shape structure and it is designed to operating at center frequency about 6GHz. The entire radiating element is centered on top of a square ground plane with size of 50mm×50mm. A shorting wall with the same width as the upper patch is connected to the ground plane, which is mainly used to reduce the overall size of the antenna.

As the substrate of the whole antenna is air, the antenna is supported by the coaxial probe and the shorting wall. The overall height (H1) of the proposed antenna is higher than the length of the probe (H2). Therefore a thicker substrate is introduced without increasing the probe inductance. This helps widen the impedance bandwidth of the antenna significantly. The one arm of the half E-shaped patch antenna presented on the upper patch play an important role in producing a double-resonance.

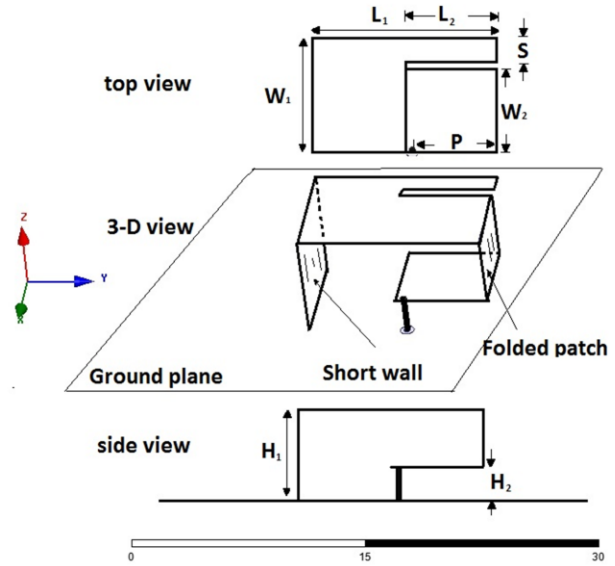

Figure 1. Geometries of the proposed patch antennas.

The specific dimensions of the antenna are shown in Table I.

TABLE I. Dimensions of Antenna (units in mm).

L_1	L_2	H_1	H_2	W_1	W_2	P	S
12	6	7	2.5	7.5	5.5	5	1.5

3. Numerical Simulation Results

The UWB antenna has been analysed by Ansoft HFSS. Fig. 2 is the simulated results of the voltage standing wave ratio (VSWR) of the antenna. From the figure 2, we can easily find out that there are two resonant frequencies at 4.95GHz and 7.72GHz. The bandwidth (VSWR≤2) of the antenna is 59.9% from 4.41 GHz to 8.18 GHz.

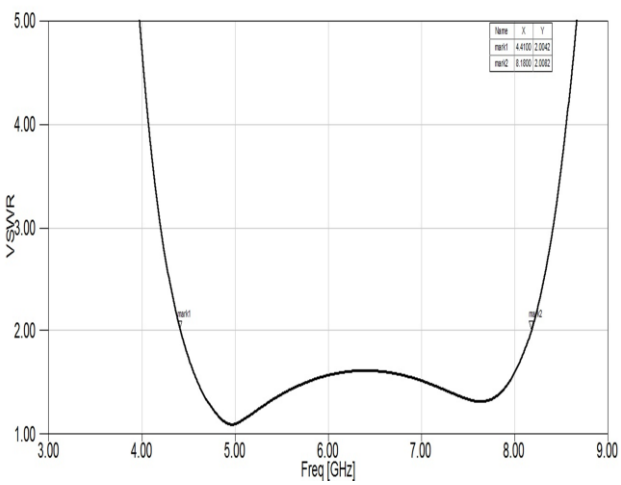

Figure.2. the VSWR results of the Antenna

Fig.3 shows the simulated results of proposed antenna at 4.41, 6.29 and 8.28 GHz in XZ and YZ planes. As with most small antennas with shorting pin and shorting wall, the cross polarization levels are considerably higher than conventional patch antennas. Although the operating frequency band is 59.9%, the radiation patterns of the proposed antenna do not change drastically over the frequency band.

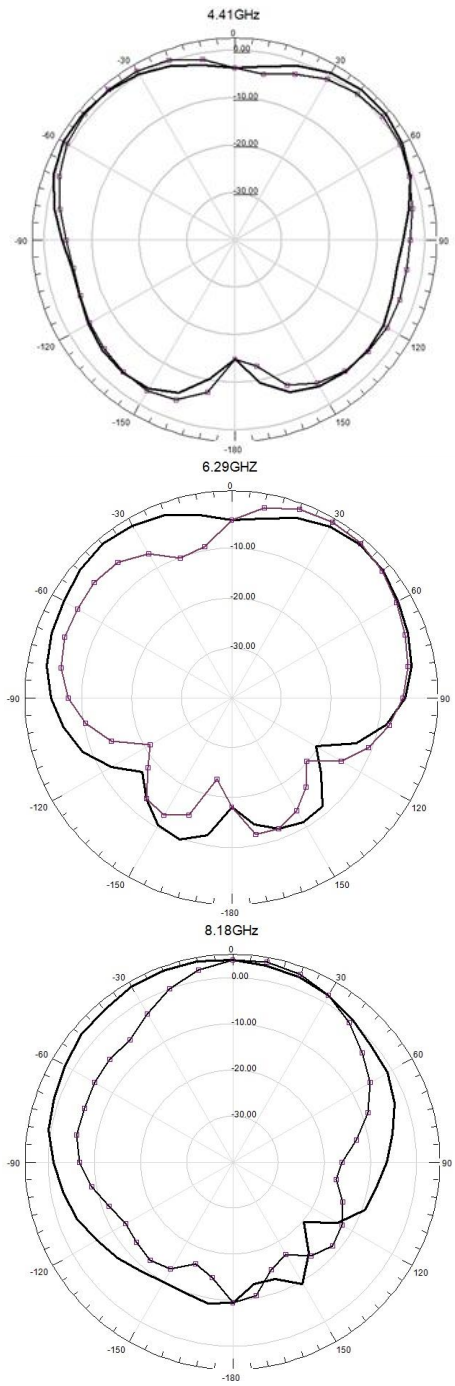

Figure.3. The radiation patterns −XZ plane YZ plane

The simulated gain of the proposed antenna is given in Fig.4. The total Gain doesn't change roughly with a peak gain of almost 8.1dB. The average Gain is about 6.0dB.

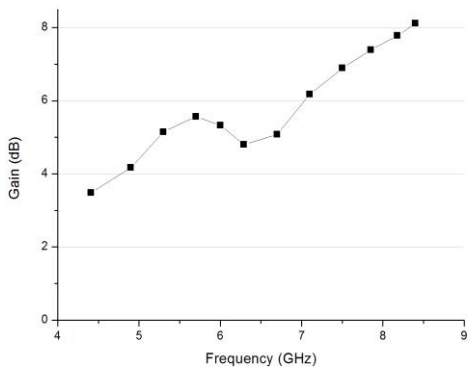

Figure.4. The total Gain of antenna

4. Conclusion

In this paper, a novel fourth wavelength folded broadband microstrip patch antenna has been demonstrated. The 3-D sizes of proposed patch antenna are about 0.252λ0×0.157λ0×0.147λ0. The impedance bandwidth, gain and radiation pattern of this antenna are shown. It achieves an impedance bandwidth of 59.9% and the radiation patterns and gain of our proposed antenna are basically stable over the frequency band.

5. Acknowledgments

This work is supported by The Scientific Research Foundation of the Education Department of Sichuan Province, China (11ZA208) and the Fundamental Research Funds for the Central Universities (2682014BR007EM).

6. References

1. Wong, K.L "Compact and broadband microstrip antennas" (John Wiley& Sons, 0-471-22111-2 (Electronic), Copyright 2002).

2. KL Wong, SW Su "Dual-band planar monopole antenna with a U-shaped slot" US Patent 6,774,853, 2004 - Google Patents.

3. J. R.Panda, R.S. Kshetrimayum "An F-Shaped Printed Monopole Antenna For Dual-Band Rfid And Wlan Applications" Microwave And Optical Technology Letters, Vol. 53, No. 7, pp 1475-1481, 2011.

4. J.Ghosh, B. Roy, A. K. Bhattacharjee , S. K. Chowdhury "L-Shaped Dual Band Microstrip Fed Monopole Patch Antenna for Wireless Applications" International Journal of Applied Engineering Research, Vol. 9, no 8,pp 855-862,2014..

5. Y. X. Guo, A. Shackelford, K. F. Lee, and K. M. Luk, "Broadband quarter-wavelength patch antennas with a U-shaped slot", Microw. Opt. Tech. Lett., vol. 28, no. 5, pp. 328–330, Mar. 2001.

6. A. K. Shackelford, K. F. Lee, and K. M. Luk, "Design of small-size wideband microstrip patch antennas", IEEE Antennas Propag. Mag., vol. 45, no. 1, pp. 75–83, Feb. 2003.

7. A.K. Shackelford, K. F. Lee, K. M. Luk, and R. Chair, "u-slot patch antenna with shorting pin", Electron. Lett, vol. 37, no. 12, pp. 729–730, Jun. 2001.

8. Chiu, C.Y.; Chan, C.H.; Luk, K.M.; "Bandwidth enhancement technique for quarter-wave patch antennas." Microwaves, Antennas and Propagation, IEE Proceedings -Volume 152, Issue 5, pp. 319 – 323, Oct. 2005.

9. C.Y. Chiu, H. Wong and C.H. Chan.; "Study of small wideband folded-patch-feed antennas". IET Microwave Antennas Propagation, vol. 1, no.2, pp.501–505. 2007.

10. Chiu, C.Y., Chan, C.H., and Luk, K.M.: 'Small dual-band antenna with folded patch technique', IEEE Antennas Wirel. propag. Lett., 2004, 3, pp. 108–110.

11. Chiu, C.Y., Chan, C.H., and Luk, K.M.: 'Study of small wideband patch antenna with double shorting walls', IEEE Antennas Wirel. Propag. Lett. 2004. 3, pp. 230–231.

12. A.A Deshmukh. and G. Kumar, "Half u-slot loaded rectangular microstrip antenna", in IEEE AP-S Int. Symp. USNC/CNC/URSI National Radio Science Meeting, vol. 2, pp. 876–879, 2003.

13. Puneet Khanna, Amar Sharma,Kshitij Shinghal, Arun Kumar "A Defected Structure Shaped CPW-Fed Wideband Microstrip Antenna for Wireless Applications" Journal of Engineering, Journal of Engineering, 2016, 2016(4):1-7.

14. A.K. Gautam, A. Bisht, B. Kr. Kanaujia, "A wideband antenna with defected ground plane for WLAN/WiMAX applications" AEU—International Journal of Electronics and Communications, vol. 70, no. 3, pp. 354–358, 2016.

15. Mak, C.L.; Chair, R.; Lee, K.F.; Luk, K.M.; Kishk, A.A." Half u-slot patch antenna with shorting wall" Electronics Letters, vol. 39, pp.1779 – 1780. Dec. 2003.

16. Z.W Shi; S.W Xie; Y.S Pan; "A Small Ultra-Wideband Folded Half E-shaped patch antenna" ICACSEI 2013, pp.178-181, 2013.

17. Chair, R.; Lee, K.F.; Mak, C.L.; Luk, K.M.; Kishk, A.A, "Wideband Half u-slot Patch Antennas with Shorting Pin and Shorting Wall" Antennas and Propagation Society International Symposium, 2004. IEEE Volume 4, pp.4132 – 4135, June 2004.