CSRH-II Analog Receiver System Stability Designing and Testing

Lihong Geng[1], Yihua Yan[1],Qinghui Song[2], Lihui Wei[2], Zhijun Chen[1], Wei Wang[1], Linjie Chen[1], Donghao Liu[1], Cang Su[1], Yunying Jiang[1]

[1]National Astronomical Observatory, CAS, China
[2]The 54th Research Institute of China Electronics Technology Group Corporation (CETC54)

Abstract

Analog receiver is one of the key parts of the Chinese Spectral Radioheliograph (CSRH). Analog receiver CSRH-II is used to amplify, transmitting and down converting the solar emission signal from 2GHz to 15GHz.Its system stability is much important for achieving the best quality solar images. CSRH-II system specifications set high requirements for the analog receiver system's stability designing and testing. In this paper, CSRH-II analog receiver system specification requirement, designing and testing will be discussed and presented.

1 Functions and specifications of CSRH-II and its analog receiver sub-system

Not only the functions and specifications, but also the operating environment, mounting, and testing should be taken into consideration when designing analog receiver sub-system stability. The main difficulties lye in: array channels number, long distance transferring, wide frequency band, high amplitude and phase stability and coincidence, temperature variation and the limits of volume and weight. Table 1 shows the functions and specifications of CSRH-II and its analog receiver sub-system.

Table 1: functions and specifications of CSRH-II and its analog receiver sub-system

Freqency:	2～15GHz
IF bandwidth 1：	400MHz (50-450MHz)
IF bandwidth 1：	80MHz（210MHz~290MHz）
P-1dB：	≥+14dBm
Input dynamic range：	-100～-45dBm
Gain Flatness：	75±2.0dB
NF：	3.5dB
Channel Isolation：	≥70dB
Frequency stability：	±1×10-10（1d），±1×10-12（1s～1m）
LO phase noise：	-90dBc/Hz@10kHz，-95dBc/Hz@100kHz
Frequency change setup time：	≤50us
LO1:	9.5GHz~18.5GHz，step 10MHz
LO2:	4.7GHz/8.7GHz
LO3:	1.45GHz

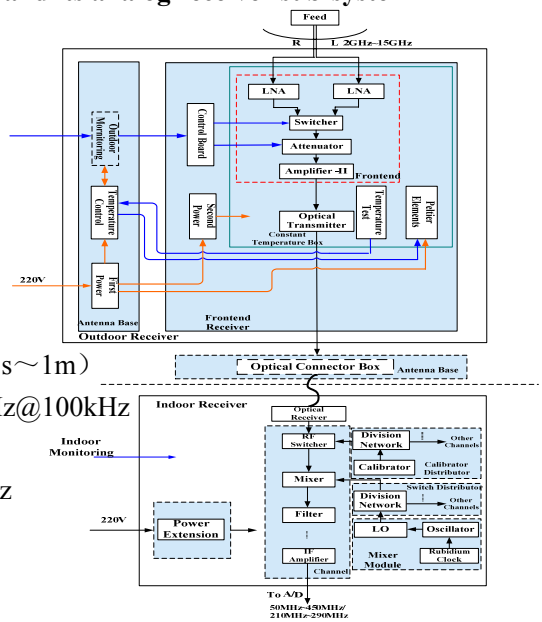

Figure 1: block diagram of CSRH-II analog receiver

978-1-4673-5225-3/14/$31.00 ©2014 IEEE

2 CSRH-II Analog Receiver System Stability Designing

To keep the system up to the best stability, system stability design point of the CSRH-II analog receiver is put on thermal design, the system structure design, and chip selection.

2.1 thermal design

Environment temperature variation is one of the main factors of the system un-stability.

Several measures are taken into consideration for the temperature-sensitive chips or parts. These chips or parts are put into a constant temperature box.

The front end water proof box of the analog receiver is mounted on the 2.0m antenna near the feed. It is made of light magnalium material, cooled by semiconductor. Its temperature can be remote controlled and with high temperature precise and wide adjusting range

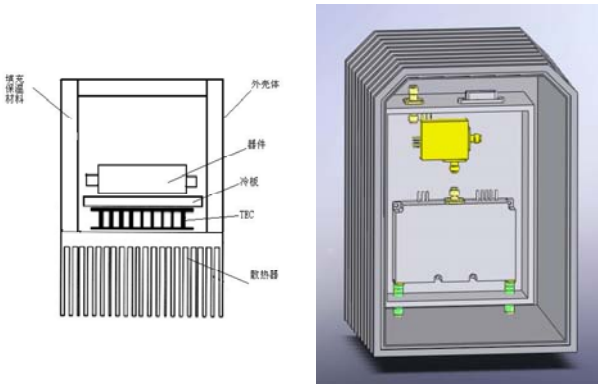

Figure 2: CSRH-II front end(±0.1°C，range :10~40°C)

The indoor part of the CSRH-II analog receiver is also thermal controlled, especially for the OE parts. Figure 3 shows the thermal simulation for the indoor part of the 10 channels box.Simulation verified that in different environment temperature, the main parameters, amplitude (≤±5%（RMS）and phase stability (≤4°（RMS）can be met if keep the temperature variance small than 20 ℃, and adopt the temperature compensation measure.

(10℃) (40℃)

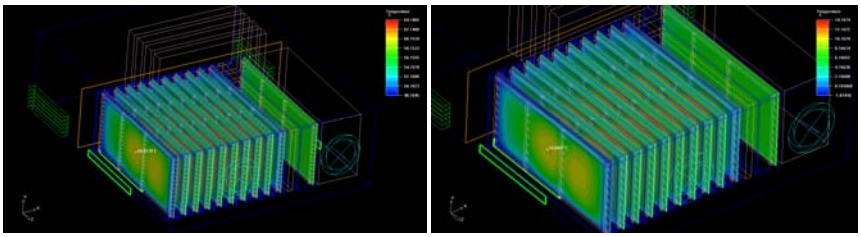

Figure 3 : temperature varies form 14.16℃to 10.68℃: 3.48℃(left),temperature varies form 64.14℃ to 60.81℃ : 3.33℃(right)

2.2 Optimized system structure design

Three considerations are adopted:

- RF optical fiber transmitting using 102 high stable single-mode Optical fiber lines with 3.4km long ,buried 2.5m underground,very low transmission loss, no RF interference.The only disadvantage of dynamic range limit is compensated by an attenuator in the signal link of frontend
- Modular design
- Internal calibration source
- Double IF outputs
- System reliability: double power, double LO, and with 6 backup channels
- Making use of LTCC technology: the phase difference of swich amplifier in 2~15GHz is about 4°

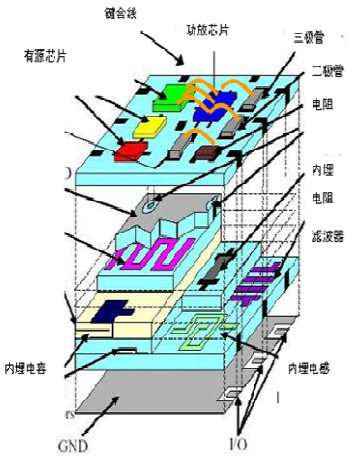

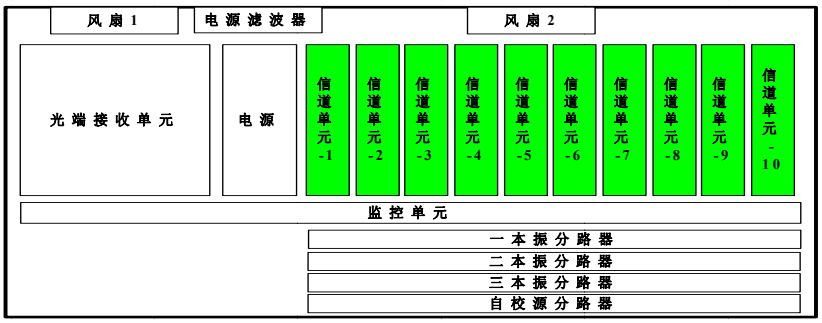

Figure4：LTCC multi-layer structure character **figure5:** Modular design for indoor parts

2.3 Chip selection and quality controlling

All the chips and materials used in CSRH-II analog receiver are highly quality controlled, with higher quality level, low noise temperature, good amplitude and phase stability and consistemcy, good flatness, and low temperature sensitive. Micro package technology is also used.

Figure 6: Measurement of the amplitude and phase stability in the situation and thermal controlled oven

3 Measurement of amplitude and phase stability

Table3：phase stability test（15GHz,15 ℃）

时间(min)	1-2(°)	3-9(°)	6-7(°)	8-10(°)
20	63.1	62.3	-24.3	47.1
40	63.5	62.3	-24.5	46.9
60	63.7	62.4	-24.7	47.2
80	63.8	62.5	-24.3	47.5
100	63.5	62.3	-24.6	47.4
120	63.6	62.4	-24.7	47.3

table4：phase stability test(15GHz,25 ℃）

时间(min)	1-2(°)	3-9(°)	6-7(°)	8-10(°)
20	65.9	67.9	-27.3	51.1
40	65.8	67.8	-27.4	51.2
60	65.7	67.5	-27.7	51.4
80	65.8	67.4	-27.5	51.5
100	65.7	67.6	-27.6	51.1
120	65.5	67.9	-27.7	51.2

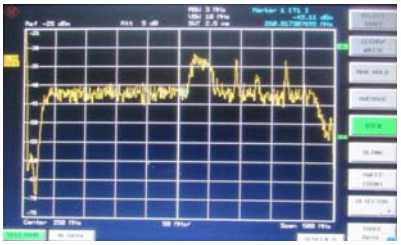

Figure 7：testing the analog system output when pointing to a GEO satellite

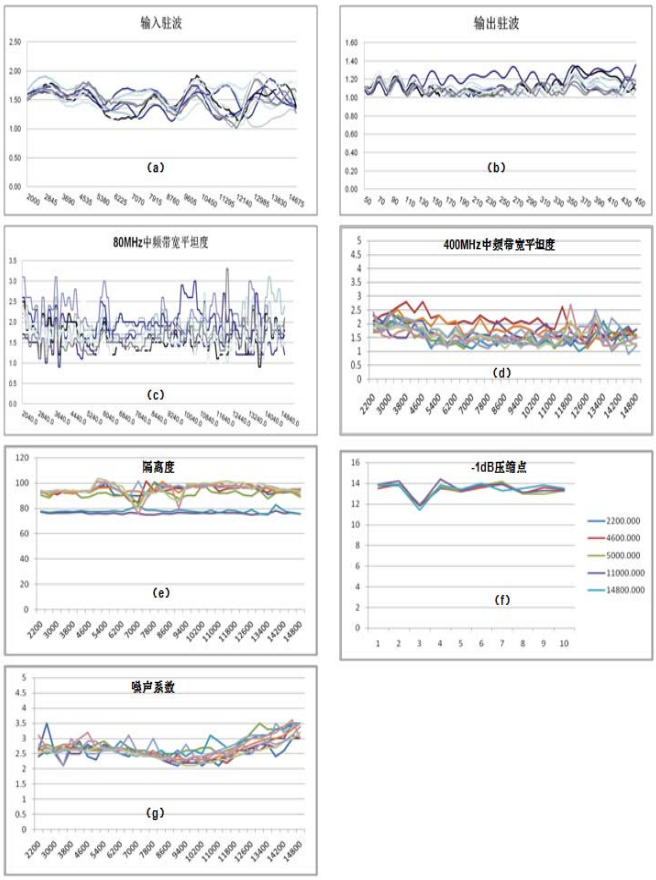

Figure 8：(a）~(g) testing results for 10 channels

4 conclusion

The optimized designs from system structure, technology, and chip selection of the CSRH-II array analog receiver, guarantee its high stability and high coincidences. And the performances have been verified by tests in the situation. All the units of the subsystem now have been mounted on CSRH-II in MingAuTu observatory and been under continous monitoring.