Wideband Radar for Ice Sheet Sounding and Imaging

S. Gogineni, Z. Wang, J.B. Yan, F. Rodriguez-Morales, C. Leuschen, J. Paden, R. Hale, and D. Braaten

Center for Remote Sensing of Ice Sheets, The University of Kansas, Lawrence, KS 66045, U.S.A.

Abstract

We developed a wideband radar that operates over the frequency range of 190-450 MHz for sounding ice, mapping internal layers and imaging the ice bed with fine resolution. The radar transmits chirped pulses of 1 μs and 10 μs duration with peak power about 1 kW at a pulse repetition frequency of 10 kHz. The short pulse is used for sounding shallow ice and mapping layers near the surface and the long pulse is used for sounding thick ice, mapping deep internal layers and imaging the ice bed. The radar is operated with a cross-track array of eight elements. Data from each element are digitized for processing with synthetic aperture radar (SAR) algorithms to synthesize a narrow beam in the along-track direction as well as cross-track adaptive beamformation using data-dependent array processing algorithms. Array processing is employed for reducing cross-track surface clutter and to generate 3-D images of the ice bed.

The radar consists of a digital subsystem, a radio frequency (RF) subsystem and a fuselage- mounted antenna array. The antenna array is shared by the transmitter and receiver through a high-power T/R switch. Real-time transmit beamforming can be performed by setting the amplitude, phase and time delay of the transmitted signals from the waveform generator; and receive beamfoming can be done in the post-processing stage after the received signals are digitized at RF with an effect sampling frequency of 1 GHz. The digitized signals are further pre-processed by field programmable gate array (FPGA) based digital receiver in real time and the data are recorded in a Linux file storage server with the solid-state drive (SSD) array.

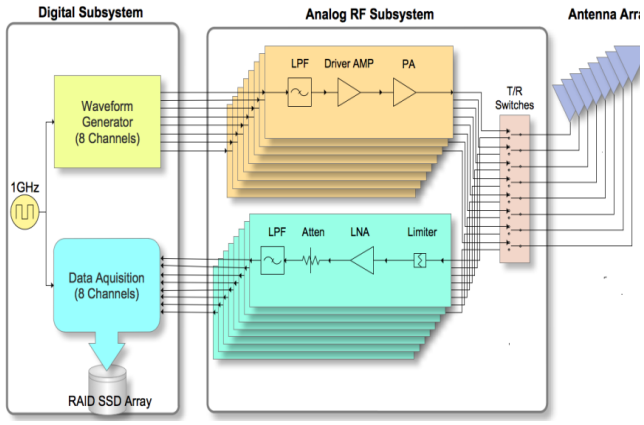

Fig. 1. Simplified diagram of the ultrawideband SAR system

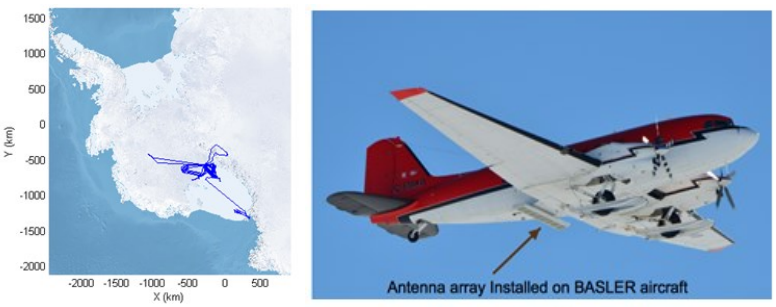

Fig. 2. BASLER platform integrated with the radar system and its flight trajectories

The developed radar system was installed on a BT-67 (BASLER) aircraft, and deployed in Antarctica from December 2013 to January 2014 to collect measurements over ice streams in the Western region. Figure 2 shows the BASLER aircraft outfitted with the antenna array and the flight trajectories surveyed with the radar. The total science survey covered about 18000 km. Over 60 terabytes (TB) of science data were collected during the campaign. The echogram in Figure 3 features representative data product derived from data after post processing. It illustrates the capabilities of the CReSIS radar in remote sensing thick ice and mapping internal layers with fine resolution. Most of the data we collect are freely distributed to the science community through our CReSIS website and through the National Snow and Ice Data Center.

This paper gives an overview of instrumentation and signal processing aspects of the new system. Sample data products collected from the field deployment campaign in the vicinity of Subglacial Lake Whillans, West Antarctica will be presented.

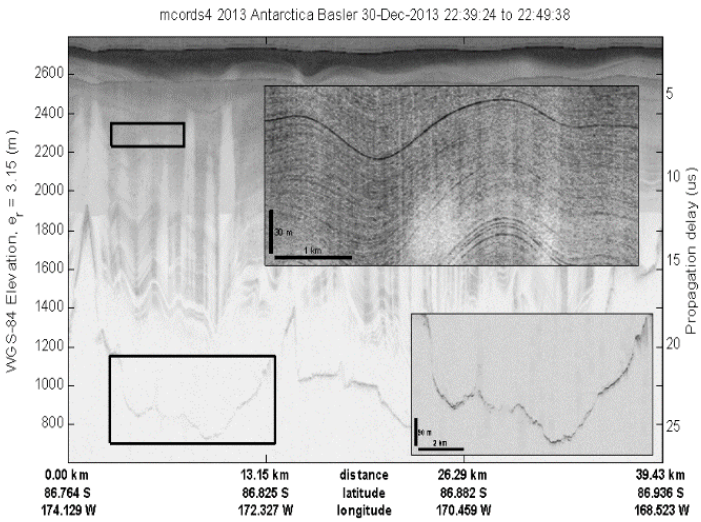

Fig. 3 Sample ecchogram from the 2013 Antarctica Deployment