Wideband Microstrip Band-pass Filter For L-band Low-noise Receiver

Jin Fan[12], Chengjin Jin[12], Rendong Nan[12], and Jirun Luo[3]*

[1] Department of FAST, the National Astronomy Observatory of China, Chaoyang District, Beijing, 100012, China
(e-mail: jfan@bao.ac.cn, cjjin@bao.ac.cn, nrd@bao.ac.cn)

[2] Key Laboratory of Radio Astronomy, Chinese Academy of Sciences, Beijing 100012, China

[3] Department of Microwave Device, Institution of Electronics of Chinese Academy of Sciences, Haidian District, Beijing, 100190, China (e-mail: luojirun@mail.ie.ac.cn)

Abstract

This paper presents a novel wideband microstrip band-pass filter for L-band low noise receiver of radio telescope. By introducing a stepped-impedance one-wavelength ring resonator (SORR) into a stepped-impedance half-wavelength resonator (SHR), excellent in-band performance is realized. In order to suppress the harmonic responses of the filter for a wide stop-band, two band-stop sections with asymmetrical π-type structure are designed. A prototype filter having 49.3% of 1-dB and 57.9% of 3-dB fractional bandwidth is fabricated with advantages of compact size, high selectivity and high out-of-band rejection. In the pass-band, return loss is less than -18.8dB and the minimal insertion loss is 0.6 dB.

Introduction

The conventional band-pass filter is commonly designed using the insertion loss methods with coupled microstrip line structure [1]. The insertion loss method allows increasing the order of the resonator to increase transmission poles number, accordingly to reduce pass-band ripples and improve the filter frequency selectivity. This method is at the expense of a large size and increased insertion loss. To realize wideband performance, coupled-lines filters generally require very tightly coupling lines, which are difficult to fabricate.

In recent years, a variety of different forms of multi-mode resonators have been proposed in order to realize the wideband characteristics of the filters [2]-[6]. The filter based on stepped-impedance multi-mode resonator aims at transmitting the signals in the whole band of 3.1GHz-10.6GHz, which meet the requirements of the indoor and hand-held ultra-wideband systems [3]. Band-pass filters based on ring resonators can produce not only two transmission poles in the pass-band, but also two transmission zeros at two sides of the pass-band [4]. Due to its excellent performance and compact size as well as low cost, it is widely used in wireless and mobile communications. A side-coupled ring resonator filter designed in [5] is limited by the coupling effect of the coupled line. In [6], the ring resonator band-pass filters with switchable bandwidth using stepped-impedance stubs or PIN diodes are developed to meet the demand of the multi-functional communication system. Though the filter designed with this technique can achieve a wide bandwidth, it is difficult to get low insertion loss and return loss. These filters are not suitable for high sensitivity systems, such as low noise receiver of the radio telescope, which needs very low insertion loss.

In this paper, a quadruple-mode ring resonator is proposed and applied to a wideband band-pass filter design. This resonator has four resonant modes with a small size and allows controlling the resonant frequencies sensitively, so low return loss and insertion loss may be reached. The band-pass filter is usually set in the RF stage of the receiver to pre-select the signals and suppress image response of the mixer. The filter for this application requires a wide stop-band at the high frequency. To meet this requirement two asymmetrical π-type band-stop sections are adopted to suppress the harmonic responses of the filter.

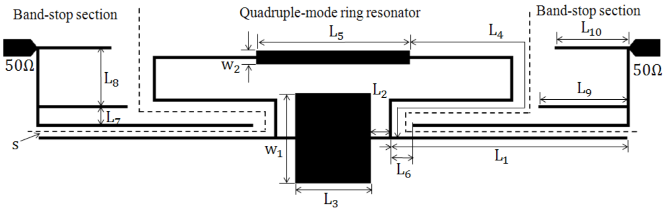

Fig.1. Structure of proposed filter: L1=19.16mm, L2=1.76mm, L3=6.30mm，L4=23.51mm, L5=12.87mm, L6=0.6mm, L7=0.74mm, L8=4.75mm, L9=7.39mm, L10=6.03mm, w1=7.50mm, w2=1.13mm, s=0.37mm

Structure of the Filter

Fig. 1 shows the topological structure of the filter discussed in this paper. It consists of three parts: the quadruple-mode ring resonator and two band-stop sections. They are coupled by parallel coupling lines. The quadruple-mode ring resonator comprises six lines, four of them forming a stepped-impedance ring with non-uniform widths (L3+2L6+2L2+L4) and the other two on the sides like arms (L1), which are branches of the coupling lines. Under strong coupling condition (coupled with long coupling lines), it provides a pass-band. The band-stop section is an asymmetrical π-type structure composed of two microstrip stubs with different lengths (L9, L10). It can form a wide stop-band above 2 GHz, which suppresses unwanted harmonic responses of the filter. To reduce the size, folded microstrip lines are utilized.

Design Principle

The quadruple-mode ring resonator in the filter can be considered as the combination and modification of SORR and SHR as shown in Fig.2.The primary two resonators have electric lengths of one-wavelength and half-wavelength at their centre frequencies respectively.

The electric length of the stepped-impedance ring (B-C-D-G-F-B, shown in Fig.2) in the filter is the same as that of the primary SORR and the lines on the sides serve as feed lines. So, the resonator keeps the characteristics of the primary SORR.

Near the centre frequency of the primary SHR, the electric length of the path B-F-G-D is about one wavelength longer than that of the path B-C-D. So the path B-F-G-D would produce little phase separation to the primary SHR. Therefore, the resonator keeps the characteristics of the primary SHR. Moreover, the lines on the sides of the ring provide a phase delay between the two primary resonators, which guarantees the responses of the two primary resonators almost superposing in phase.

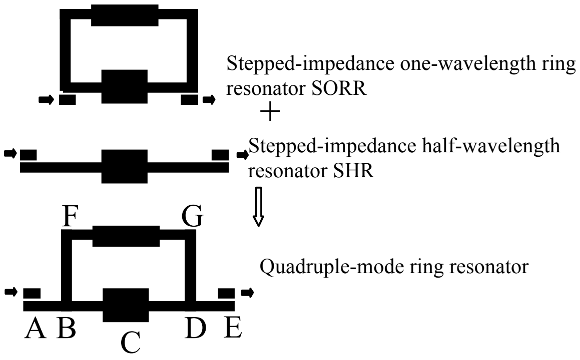

Fig.2 The quadruple-mode ring resonator

Under weak coupling condition, the frequency response of the new resonator is shown as Fig.3 (a). There are four transmission poles (P1, P2, P3, P4) and two transmission zeros (Z1, Z2). The transmission poles correspond with the resonant modes of the resonator. Thus, the resonator has quadruple modes. Two of these transmission poles (P1, P2) and the two transmission zeros (Z1, Z2) are inherited from the primary SORR and the other two transmission poles (P3, P4) are from the primary SHR.

According to [5], there are two orthogonal resonant modes at the same resonant frequency in a one-wavelength ring resonator. By introducing an appropriate perturbation on the ring, the resonant frequencies of the two modes can be separated. Because of the inherent perturbation structure of the stepped-impedance ring resonator, dual mode resonances with different frequencies are obtained. The frequency response of SORR under weak coupling condition is shown in Fig. 3 (b). Two transmission poles (P1, P2) exist between two transmission zeros (Z1, Z2). Two transmission zeros are produced near resonant frequencies resulting from electric currents in the two propagation paths canceling each other.

SHR can produce multi-mode resonances [3]. Due to the stepped impedance, the frequency spacing between the first and second-order resonant modes of the half-wavelength resonator is reduced. As a result, the first and second-order modes are both in the required band and a dual-mode resonance is achieved. Its frequency response is shown in Fig. 3 (c).

The general locations of the transmission poles and zeros can be set by choosing the total lengths of the primary resonators. The frequency spacing between Z1 and Z2 can be augmented by increasing W1, which decides the bandwidth of the filter. By adjusting L3, the frequency spacing between P1 and P2 can be changed as required, at the same time the frequencies of P3 and P4 will also be changed. Then by adjusting W2, the frequencies of P3 and P4 can be shifted to the proper locations.

Under strong coupling condition, the resonator can produce band-pass characteristics. The number of the ripples in the pass-band corresponds with the number of transmission poles of the resonator. Properly adjusting the location of the poles can improve the ripples of the filter to realize low return loss and insertion loss.

In traditional filter design, five sections of coupled microstrip lines are required to get four transmission poles and it would lead to a twice larger size of the proposed filter. Moreover, the proposed filter has good frequency selectivity due to the two transmission zeros on both sides of the pass-band.

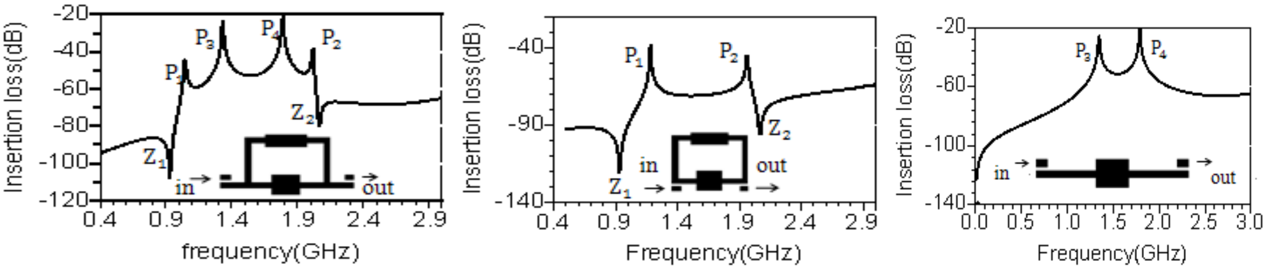

Fig.3. Frequency responses of the resonators under weak coupling (a) The proposed quadruple-mode ring resonator. (b) SORR. (c) SHR.

The band-stop section is an asymmetrical π-type structure composed of two microstrip stubs. Fig. 4 shows its characteristics. At low frequency, the return loss of the low-pass section is better than -30dB. Two transmission zeros at high frequency form a continuous stop-band. This stop-band suppresses unwanted harmonic responses of the filter so that the filter can achieve a high out-of -band rejection.

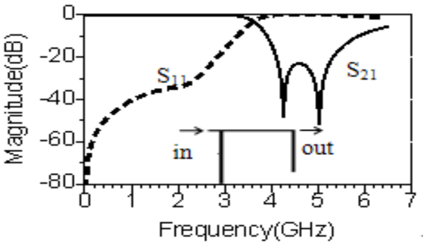

Fig.4. Frequency response of the low-pass section

Full-Wave Simulation and Measurement

The model of the filter is designed and optimized by Ansys HFSS. The final dimensions of the filter are shown in Fig.1. The filter is fabricated on a microstrip substrate with a relative dielectric constant of ε_r=11.2, thickness of t=1.6mm and loss tangent of 0.001. The fabricated filter with attached SMA connectors is shown in Figure 5. This filter is extremely compact with a size of 2cm × 6cm. The S-parameters of the filter are as shown in figure 6. It can be seen that these simulated results are in good agreement with the measurement. The measured 3-dB fractional bandwidth is 57.9%, with the center frequency of 1.45GHz. From 1.07GHz to 1.77GHz (49.3% of 1-dB fractional bandwidth), the insertion loss is less than 1dB with the minimal insertion loss 0.6 dB and the return loss is greater than 18.8dB. Compared to the filters proposed in [6] [7] [8], both of the insertion loss and return loss of the filter in this paper are greatly reduced as shown in Tab.1. And this filter also has good frequency selectivity and stop-band performance. The harmonic responses over the frequency range from 2.5 to 4.5 GHz are suppressed more than 18dB.

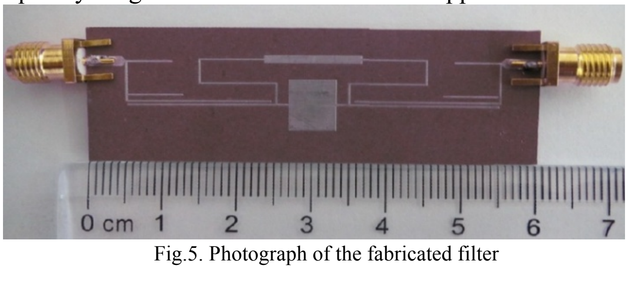

Fig.5. Photograph of the fabricated filter

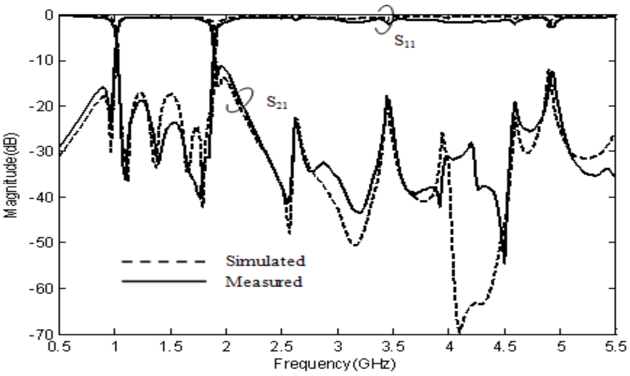

Fig.6. Measured and simulated results of the proposed filter

Table.1.Comparison with previous work

Wideband band-pass filters	Fig.4(b) in Ref.[6]	Fig.13 in Ref.[7]	Fig.8 in Ref[8]	Fig.6 in this paper
Bandwidth	3-dB BW 70.4%	3-dB BW 27.2%	3-dB BW 69.5%	3-dB BW 57.9% 1-dB BW 49.3%
Center frequency (GHz)	2.47	1	2.92	1.45
Minimal Insertion loss (dB)	1.2	1.63	1.55	0.6
Return loss (dB)	>14.26	>11.7	>7	> 18.8

Conclusion

In this paper, a compact quadruple-mode resonator is proposed by introducing a stepped-impedance ring into a stepped-impedance half-wavelength resonator. Based on this quadruple-mode resonator, a wideband band-pass filter for low noise receiver of radio telescope has been designed and realized with high performances. Due to four transmission poles, the filter has low insertion loss and return loss with a small size. Two transmission zeros on both sides of the pass-band result in a high frequency selectivity of the filter. In order to suppress the second harmonic response of the filter, two asymmetrical π-type low-pass sections are adopted. The measured results show 57.9% 3-dB fractional bandwidth, 49.3% of 1-dB fractional bandwidth with the minimal insertion loss 0.6 dB, and the return loss greater than 18.8dB. The harmonic responses over the frequency range from 2.5 to 4.5 GHz are suppressed more than 18dB.

Acknowledge

This work was supported byYoung Researcher Grant of National Astronomical Observatories. Thank Professor Yihua Yan for the revision of this paper. Because of his help, this paper can be finished in time.

References

[1] D. M. Pozar, “Microwave Engineering, 3rd Edition,” John Wiley & Sons, Inc., United States of America, 2005.

[2] J. Fan, D. Z. Zhan, C. J. Jin and J. R. Luo, “Wideband microstrip bandpass filter based on quadruple mode ring resonator,” IEEE Microw. Wireless Compon. Lett., vol. 22, no. 7, pp. 348–350, Jul.2012

[3] L. Zhu, S. Sun and W. G. Menzal, “Ultra-wideband (UWB) bandpass filters using multiple-mode resonator,” IEEE Microw. Wireless Compon. Lett., vol.15, no.11, pp.706-798.Nov.2005.

[4] M. Matsuo，H. Yabuki and M. Makimoto, “Dual-mode stepped-impedance ring resonator for bandpass filter applications,” IEEE Trans. Microw. Theory Tech, vol.49, no.7, pp.1235-1240, July 2001.

[5] M. Khairul, M. Salleh, G. Prigent and O. Pigaglio, and R. Crampagne, “Quarter-wavelength side-coupled ring resonator for bandpass filters,” IEEE Trans. Microw. Theory Tech,vol.56, no.1, pp.156-162.Jan.2008.

[6] C. H. Kim and K. Chang, “Ring resonator bandpass filter with switchable bandwidth using stepped-impedance stubs,” IEEE Trans. Microw. Theory Tech, vol.58, no.12, pp.3936-3944, Dec. 2010.

[7] K. Srisathit, A. Worapishet and W. Surakampontorn, “Design of Triple-mode ring resonator for wideband microstrip bandpass filters,” IEEE Trans. Microw. Theory Tech, vol.58, no.11, pp.2867-2877.Nov.2010.

[8] M. K. Mandal and S. Sanyal, “Design of wide-band, sharp-rejection bandpass filters with parallel-coupled lines,” IEEE Microw. Wireless Compon. Lett., vol.16, no.11, pp.597-599.Nov.2006