# Status update on APERTIF, Phased Array Feeds for the Westerbork Radio Telescope.

*W.A. van Cappellen*, J.G. Bij de Vaate*

ASTRON, P.O. Box 2, 7990 AA, Dwingeloo, The Netherlands, cappellen@astron.nl, vaate@astron.nl

## Abstract

The Westerbork Synthesis Radio Telescope (WSRT) will be upgraded with L-band Phased Array Feeds to increase its survey speed. Measurements on a prototype system revealed that out-of-band RFI at the WSRT site generated unacceptably high intermodulation products in the frequency band of operation. A low-loss high-pass filter between the antennas and the low-noise amplifiers was introduced to successfully reduce in-band intermodulation products. Verification of the system performance will be performed with ALPHA-3: a 3-dish PAF interferometer.

## 1. Introduction

The APERTIF (Aperture Tile In Focus) project aims to install Phased Array Feeds (PAFs) in the 25m diameter reflector antennas of the Westerbork Synthesis Radio Telescope (WSRT) [1]. These PAF systems can simultaneously form 37 beams on the sky and replace the current single beam horn feeds. The multi-beaming capability greatly improves the survey speed of the WSRT, enabling new astronomical science. When the project started in 2007 the concept of electrically dense PAFs was new in radio astronomy. Therefore, many prototypes have been built to demonstrate the feasibility of PAFs for radio astronomy and to provide input for the detailed design of the final APERTIF system. This detailed design phase is now almost completed and samples of the final hardware are being tested. In this paper we will present the major characteristics and some of the design challenges of the resulting system.

## 2. System overview

The WSRT-APERTIF systems consists of 12 reflector telescopes with Phased Array Feeds. Each PAF consist of 121 Vivaldi antenna elements in an area of about 80 cm x 80 cm. A room temperature Low Noise Amplifier (LNA) assembly is connected to each antenna to amplify the received signal and to filter out-of-band interferers. The amplified signals are transported over coaxial RF cables to a Faraday cage located beneath every dish. In the Faraday cage the signal is further amplified, filtered and converted to the IF band (400 – 800 MHz). The IF signals are digitized using 8 bit, 800 MS/s AD convertors. The digitized signals are then digitally split into 512 subbands. A total of 384 subbands (300 MHz net bandwidth) is beam formed. Besides the main signal flow, there is an LO system and a calibration system to periodically calibrate the gain and phase variations of the receiving channels at every dish. The beamformed signals of all dishes are then filtered into 20 kHz frequency channels and correlated. The correlated data products are temporary stored. This is the end of the real-time part of the system. In the offline processing, interfering signals are detected and removed ("flagged") and self-calibration is performed. Finally, image cubes are formed from the calibrated data and stored in the long-term archive. The design specifications of APERTIF are listed in Table 1.

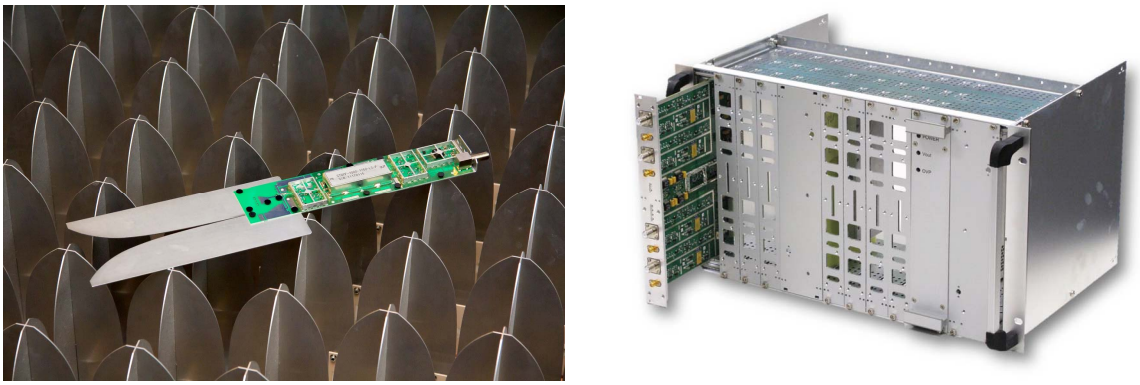

**Figure 1. APERTIF antenna element with integrated Low Noise Amplifier (left) and a rack with receiver cards (right).**

978-1-4673-5225-3/14/$31.00 ©2014 IEEE

**Table 1. APERTIF System Specifications**

| | |
|---|---|
| **Frequency range** | 1130 – 1750 MHz |
| **Instantaneous bandwidth** | 300 MHz |
| **System temperature** | 70 K |
| **Aperture efficiency** | 75% |
| **Reflector diameter** | 25 m, prime focus |
| **Number of dishes** | 12 |
| **Polarization** | Dual linear |
| **Simultaneous beams** | 37, dual pol |
| **Field of view** | 8 $deg^2$ |

## 3. RF design and Interference

The biggest challenge in the APERTIF RF design was to deal with RF interference (RFI), while keeping the system temperature as low as possible. Figure 2 shows a measured RF spectrum. Although the APERTIF frequency band is relatively free from strong signals, there are many high-power out-of-band signals, in particular DVB-T (digital television) between 400 and 850 MHz and GSM bands at 900 and 1800 MHz. Furthermore, a Secondary Surveillance Radar (SSR) is operating at 1090 MHz. Because this signal is pulsed it does not show-up in Figure 2, but its peak level is only 8 dB below the strongest DVB-T signals.

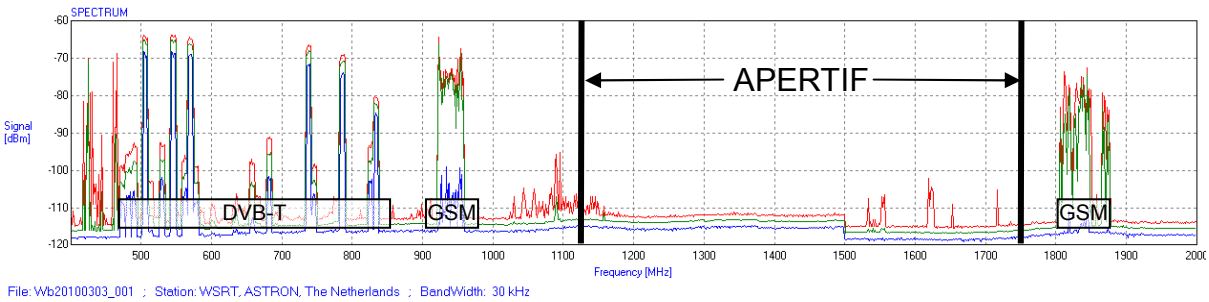


**Figure 2. Measured spectrum at the WSRT site, indicating the main interferers and the APERTIF frequency band.**

The existing L-band system of the WSRT has a horn feed with a cut-off around 1100 MHz. Therefore, most of the RFI below 1 GHz is very efficiently "filtered" by the antenna. However, the APERTIF PAF uses wideband Vivaldi elements. These antenna elements lack the sharp cut-off in their response, causing most of the DVB-T and GSM signals to be present at the input of the LNA. The second and third order intermodulation products generated in the first amplifier stage are too high (see Figure 3 (left)). Observations with such system would be completely impossible. To mitigate this issue several options have been considered. EM simulations have shown that the out-of-band signals cannot be effectively shielded in front of the antenna (for example by installing funnel around the antenna array or a rim around the reflector). It has also been considered to redesign the Vivaldi antenna such that is would be less sensitive below 1 GHz, but the achieved improvement was insufficient. An improved linearity of the LNA would require a different transistor with a higher noise figure. This is also not an option. It was concluded that inserting a filter between the antenna output and the LNA input was the only effective way to suppress the out-of-band interference before the first amplifier stage. A hybrid microstrip/lumped high-pass filter has been designed and realized. The objective was to maximally suppress the out-of-band DVB-T signals, while minimizing the in-band losses. Its measured response is shown in Figure 3 (right). The resulting output spectrum of the LNA is shown in Figure 4. The filter is expected to contribute about 15 K to the system temperature. Preliminary measurements in a single dish showed that the intermodulation products are now below the measurement threshold. Future measurements using the ALPHA-3 interferometer (see below) should determine their exact levels. The power of the SSR signal at 1090 MHz is too high for the ADC's and will result in clipping. This determined the lowest frequency of operation of APERTIF (1130 MHz).

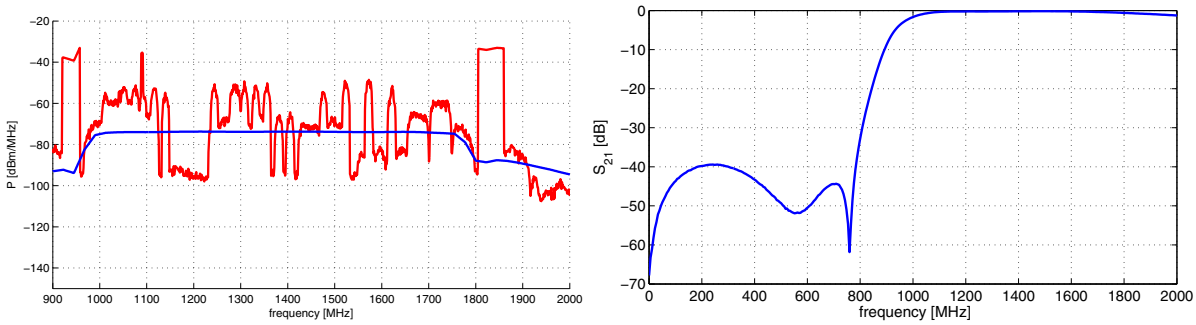


**Figure 3. Simulated worst-case spurious levels (red) and LNA noise (blue) at the LNA output in absence of a pre-LNA filter (left). Measured response of the high-pass filter inserted between the antenna element and the LNA (right).**

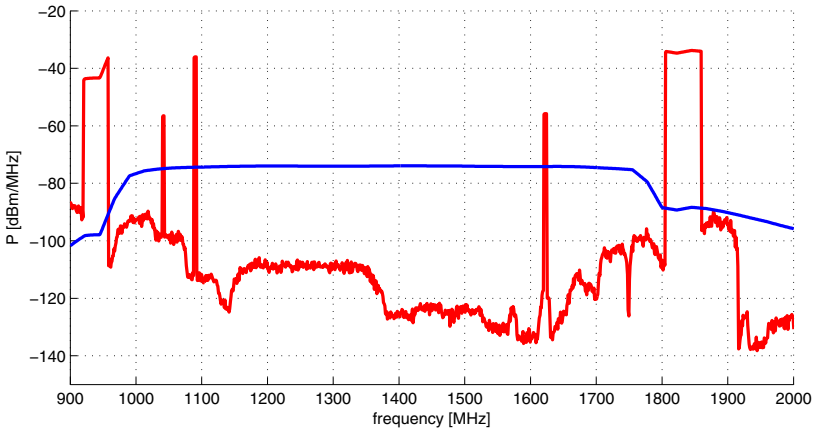


**Figure 4. Simulated worst-case spurious levels (red) and LNA noise (blue) at the LNA output with the pre-LNA high-pass filter.**

## 4. Digital signal processing

The 400 – 800 MHz IF band is digitized by 8-bit ADC's operating at 800 MS/s. The raw datarate from the ADC's is 774 Gbps per dish. First, the 400 MHz band of each antenna element is split into 781.25 kHz subbands. Then the signals from the individual elements are weighted and combined in a beam former. The two polarizations are processed independently using the bi-scalar beamforming scheme [2]. The output datarate of each dish is 178 Gbps. The beam formed data of all dishes (2.1 Tbps in total) is then transported to a central facility for correlation. The output data rate of the correlator will be less than 10 Gbps.

The real-time digital processing in the beam former and correlator is implemented on UniBoards. The UniBoard (see Figure 4 (right)) is a complex high-performance computing platform, designed for data-intensive applications in radio astronomy, such as beam forming, correlation, pulsar processing and digital filtering. Thanks to its scalable design, multiple UniBoards can be combined for higher performance, in terms of IO, memory and processing power [3]. The UniBoard is equipped with 8 Altera Stratix IV FPGAs. FPGAs were chosen, instead of for example CPUs or GPUs, because of their capability to process high data rates in real-time. Figure 5 (left) shows a functional representation of the filtering and beam former operations.

## 5. ALPHA-3

In the period from 2007 – 2013 experimental verification using early prototypes demonstrated the feasibility of the PAF concept [4]. The next step in APERTIF is ALPHA-3: A 3-PAF interferometer based on samples of the final APERTIF hardware. ALPHA-3 is the final verification stage before hardware for all 12 APERTIF telescopes is produced. The main objectives of ALPHA-3 are to demonstrate sensitivity, RFI immunity and temporal stability of the band-pass and beam patterns. It is expected that ALPHA-3 will be operational in May 2014.

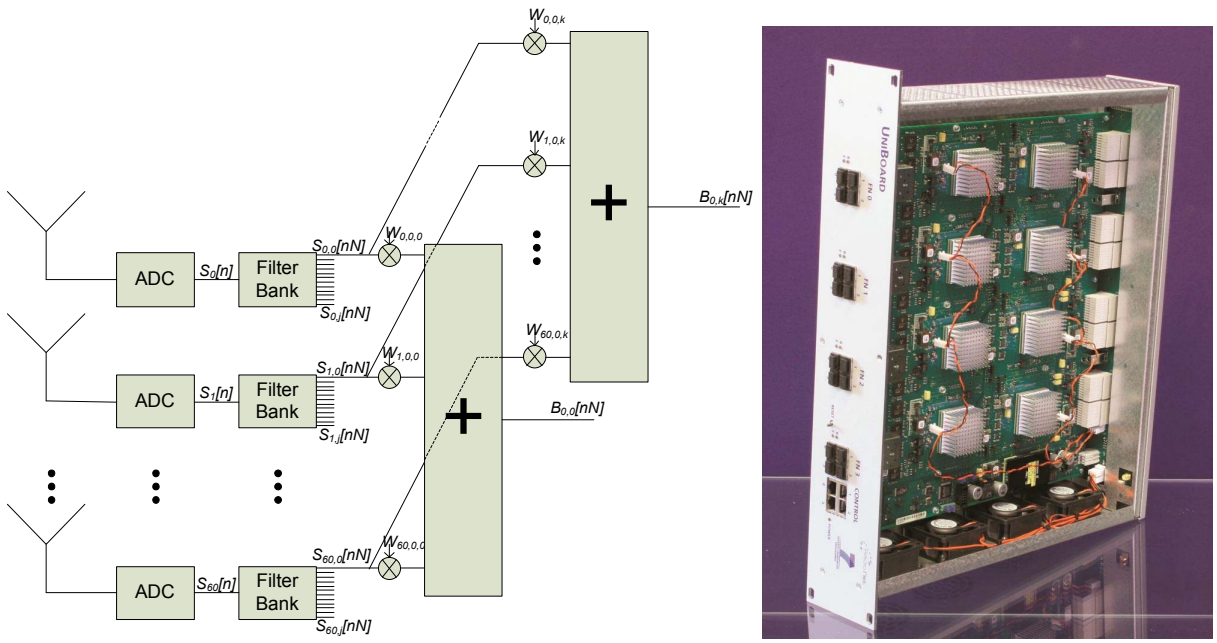


**Figure 5. Functional representation of the APERTIF beamformer system for one polarization within one dish (from [3]) (left) and a UniBoard (right).**

## 6. Conclusion

This paper presented an overview of the APERTIF system. It is concluded that RFI at the site of the WSRT necessitates a pre-LNA high-pass filter to reduce in-band intermodulation products. It has been demonstrated that such a filter can suppress the intermodulation products with more than 50 dB. Its contribution to the system temperature is around 15 K. Verification of the system performance will be performed with ALPHA-3: a 3-dish PAF interferometer.

## 7. References


1. W.A. van Cappellen, L. Bakker, “APERTIF: Phased array feeds for the Westerbork Synthesis Radio Telescope", 2010 IEEE Int. Symp .on Phased Array Systems and Tech., pp.640-647, 12-15 Oct. 2010.

2. S.J. Wijnholds, W. van Cappellen and M.V. Ivashina, "Performance Assessment of Bi-scalar Beamformers in Practical Phased Array Feed Systems", URSI GASS, Istanbul (Turkey), 13-20 Aug. 2011

3. A. Gunst, A. Szomoru, G. Schoonderbeek, E. Kooistra, D. van der Schuur, H-J. Pepping, “The application of UniBoard as a beam former for APERTIF”, Experimental Astronomy February 2014, Volume 37, Issue 1, pp 55-67.

4. W.A. van Cappellen, S.J. Wijnholds, "Polarimetric calibration results of an APERTIF phased array feed," Electromagnetics in Advanced Applications (ICEAA), 2012 International Conference on , vol., no., pp.698,701, 2-7 Sept. 2012