Carrier aggregation for multifrequency TD-LTE network

Lin Haojie[1]

[1]Shanghai Branch Institute of China Mobile Group Design Institute Co.,Ltd. 28F, No. 97, Changshou Road, Shanghai 200060,China, linhaojie@cmdi.chinamobile.com

Abstract

Some discontiguous frequency spectrum has been allocated to operators due to the limited wireless (frequency) spectrum resource. A single frequency band is difficult to meet the bandwidth requirement of the LTE-A technology. Therefore, carrier aggregation (CA) is introduced by 3GPP. Intra-band or inter-band component carriers (CCs) are aggregated to multiply the peak data rate. In the case of that three Chinese operators acquire the business license of TD-LTE at the same time, the spectrum resource of TD-LTE seems to be more dispersed. The evolution of TDD LTE-Advanced has set a higher demand for Chinese operators.

1. Introduction

To provide a higher data rate, 3rd Generation Partnership Project (3GPP) proposes a downlink data rate of 1 Gbit/s in Long Term Evolution-Advanced (LTE-A). However, some discontiguous frequency spectrum has been allocated to operators due to limited wireless spectrum resource. A single frequency band is difficult to meet the bandwidth requirement of the LTE-A technology. Therefore, 3GPP Release 11 (TR 36.913) [1] introduced carrier aggregation (CA). Intra-band or inter-band component carriers (CCs) are aggregated to multiply the peak data rate. With CA, a bandwidth of 40 MHz to 100 MHz can be reached to provide a peak data rate ranging from 300 Mbit/s to 750 Mbit/s or even more than 1 Gbit/s in 4x4 multiple-input multiple-output (MIMO) mode, which meets the requirement of the 3GPP specifications.

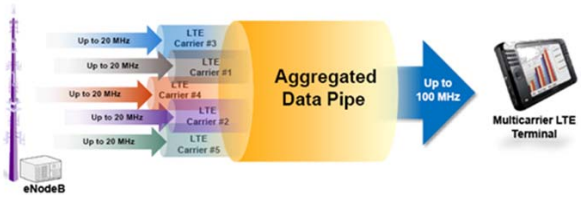

Figure 1-1 Carrier Aggregation

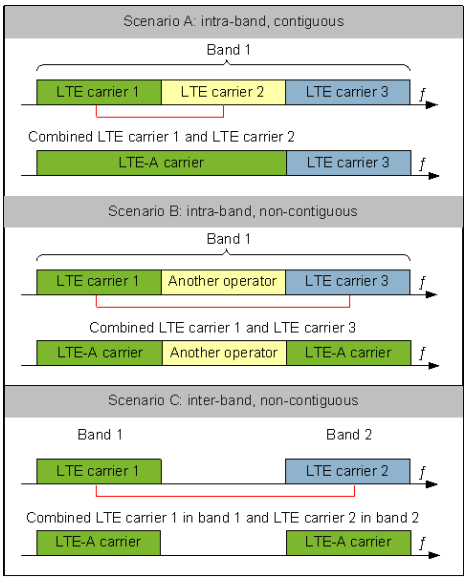

Figure 1-2 Intra-band CA and Inter-band CA

Different performances with and without the CA function are described as follows:

•Before the CA function is enabled, a UE can access a single carrier for downlink (DL) and uplink (UL) data transmission and the transmission data rate is restricted by the single-carrier bandwidth.

•After the CA function is enabled, a CA-capable UE can simultaneously access two carriers for downlink and uplink data transmission and the transmission data rate is substantially improved.

3GPP Release 10 (TS 36.300) [2] specifications define the following CA principles for LTE-A:

•A CA-capable UE can be allocated resources on up to five CCs in UL and DL, and each carrier has a maximum of 20 MHz bandwidth.

•A CA-capable UE supports asymmetric CA. The number of aggregated carriers can be different in DL and UL. However, the number of UL CCs is never larger than the number of DL CCs.

978-1-4673-5225-3/14/$31.00 ©2014 IEEE

•The frame structure of each CC is the same as that in 3GPP Release 8 for the purpose of backward compatibility.

•Carriers used for aggregation in 3GPP Release 10 are Release 8/Release 9-compatible carriers. A Release 8/Release 9 UE can transmit or receive data over a carrier to be aggregated.

Based on the frequency bands of carriers to be aggregated, CA can be classified into:

•Intra-band CA: Two intra-band carriers are aggregated for a UE to perform data transmission in UL and DL over the two carriers. Intra-band CA can be contiguous or discontiguous, such as scenario A and scenario B shown in the figure1-2.

•Inter-band CA: Two inter-band carriers are aggregated for a UE to perform data transmission in DL over the two carriers. Scenario C shown in the figure1-2 is inter-band CA.

2. Typical Application Scenarios for CA

According to TS 36.300[2] specifications, there are five typical application scenarios.

The following figure shows frequency band 1 (F1) in yellow and frequency band 2 (F2) in purple. 3GPP specifications define that two inter-band carriers in typical application scenarios are served by the same eNodeB, namely intra-eNodeB CA.

•Scenario 1：intra-eNodeB co-coverage

•Scenario 2：intra-eNodeB different-coverage

•Scenario 3：intra-eNodeB coverage hole supplement

•Scenario 4：macro network + hot-spot coverage

•Scenario 5：intra-eNodeB different-coverage + repeater

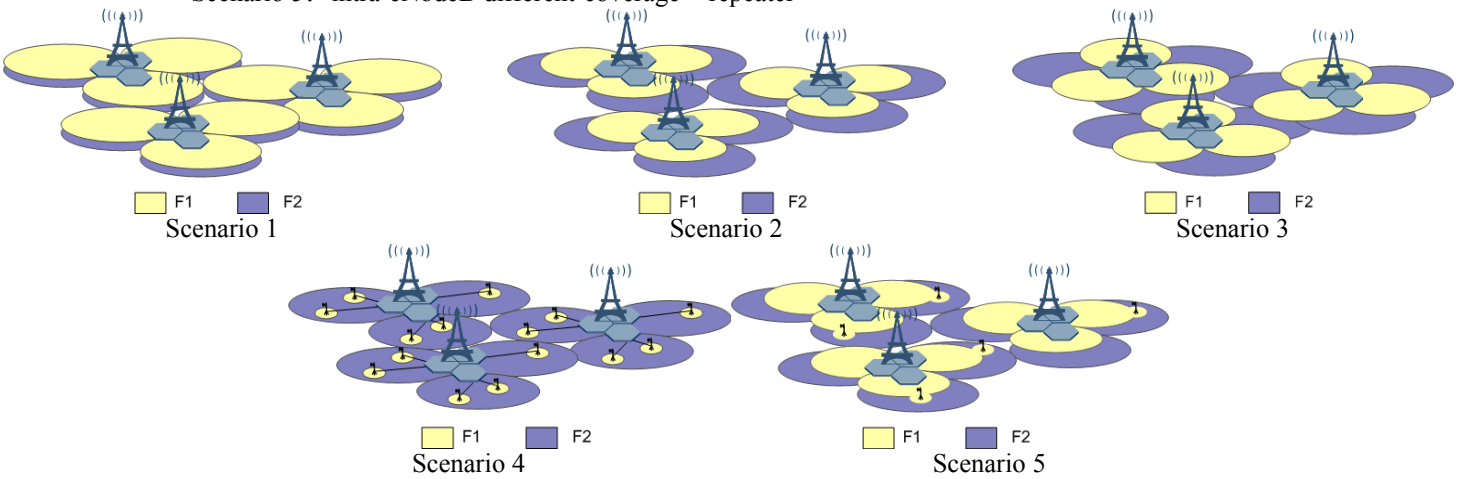

Figure 2-1 Typical Application Scenarios for CA

3. CA Service Procedure

The CA service procedure in the preceding figure is described as follows:

1. OM personnel configure a cell cluster for CA on the eNodeB and CA-related parameters.

2. The UE initiates a call setup procedure and performs services.

3. The eNodeB instructs the UE to measure other cells in the cell cluster. Based on the measurement result, the eNodeB determines the secondary cell (SCell) and then sends an RRC connection reconfiguration message to configure the SCell for the UE.

4. The eNodeB checks the traffic volume. If the traffic volume increases, the eNodeB activates the SCell and makes the primary cell (PCell) and SCell to transmit data simultaneously. If the traffic volume decreases, the eNodeB deactivates the SCell, saving power consumption for the UE. In addition, the eNodeB sends CA-related counters and performance monitoring data to the Operation Support System (OSS) for performance evaluation.

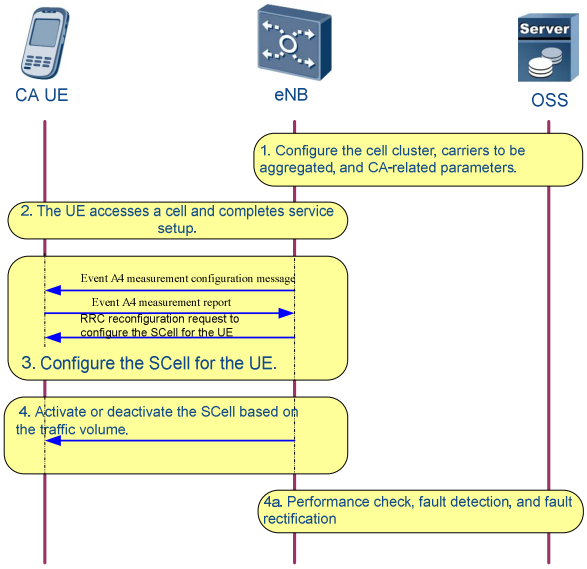

Figure 3-1 CA Service Procedure

4. Feature Performance

The CA function affects the system capacity in terms of:

•Number of RRC-connected users

After a CA-capable UE is configured with an SCell, the UE is regarded as an RRC-connected user in both the PCell and the SCell. In extreme scenarios where all UEs in a network support CA, the number of UEs that can access the network is reduced by half. To maximum the number of UEs that can access the network, the admission and congestion control algorithm preferentially releases CA-capable UEs using the cell as SCell when the number of RRC-connected users in the cell or on the LBBP peaks.

•Physical uplink control channel (PUCCH) overhead

The uplink ACK/NACK and CQI information of the SCell is transmitted on the PUCCH of the PCell, resulting in doubled PUCCH overhead for the PCell. As a result, more resource blocks (RBs) on the PCell are configured for the PUCCH.

•Total entire-network throughput

When resources on the entire network are not all used, the CA function can be enabled to improve the entire-network resource utilization and the total throughput.

•UE data rate

When resources on the entire network are not all used, the CA function can be enabled to significantly increase the UE data rate and improve the user experience.

5. CA Solution for CMCC TD-LTE network

3GPP Release 12 (TS 36.101) [3] specifications define the operating bands for LTE TDD in Table 5-1.

Table 5-1 E-UTRA TDD operating bands

E-UTRA Operating Band	Uplink (UL) operating band BS receive UE transmit	Downlink (DL) operating band BS transmit UE receive	Duplex Mode
	$F_{UL\ low}$ – $F_{UL\ high}$	$F_{DL\ low}$ – $F_{DL\ high}$	
33	1900 MHz–1920 MHz	1900 MHz–1920 MHz	TDD
34	2010 MHz–2025 MHz	2010 MHz–2025 MHz	TDD
35	1850 MHz–1910 MHz	1850 MHz–1910 MHz	TDD
36	1930 MHz–1990 MHz	1930 MHz–1990 MHz	TDD
37	1910 MHz–1930 MHz	1910 MHz–1930 MHz	TDD
38	2570 MHz–2620 MHz	2570 MHz–2620 MHz	TDD
39	1880 MHz–1920 MHz	1880 MHz–1920 MHz	TDD

E-UTRA Operating Band	Uplink (UL) operating band BS receive UE transmit	Downlink (DL) operating band BS transmit UE receive	Duplex Mode
	$F_{UL\ low}$ – $F_{UL\ high}$	$F_{DL\ low}$ – $F_{DL\ high}$	
40	2300 MHz–2400 MHz	2300 MHz–2400 MHz	TDD
41	2496 MHz–2690 MHz	2496 MHz–2690 MHz	TDD
42	3400 MHz–3600 MHz	3400 MHz–3600 MHz	TDD
43	3600 MHz–3800 MHz	3600 MHz–3800 MHz	TDD
44	703 MHz–803 MHz	703 MHz–803 MHz	TDD

The business license of TD-LTE was issued by the Ministry of industry and information technology of PRC to China mobile communication corporation, China Telecom Group and China United Network Communications Group Co., Ltd on December 4, 2013. As the figure5-1 shows, China Mobile has been distributed 130MHz spectrum resource, including 1880-1900 MHz, 2320-2370 MHz and 2575-2635 MHz, China Unicom has been distributed 40MHz spectrum resource, including 2300-2320 MHz and 2555-2575 MHz, China Telecom has been distributed 40MHz spectrum resource, including 2370-2390 MHz and 2635-2655 MHz.

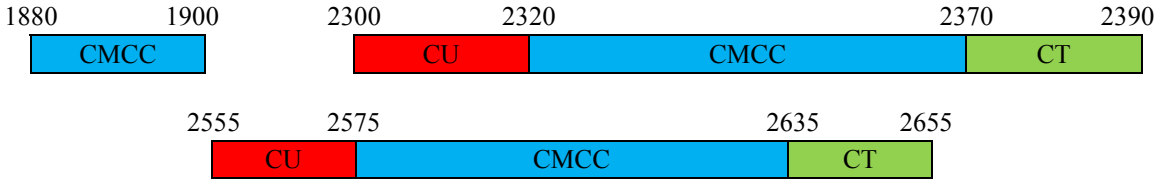

Figure 5-1 Allocation of TD-LTE Spectrum resources for three operators of China

For China Mobile, the F band (1880-1900 MHz) and D band (2575-2635 MHz) are used for outdoor coverage. Depending on the radio characteristics, the propagation characteristics of F band is better than the one of D band. However, the D band is abundant in spectrum resource. There are three main scenarios for CMCC to use D band and F band.

• Scenario 1：intra-eNodeB co-coverage

Considering the rich spectrum resource of D band, it can be used for outdoor coverage in the large data requirement area such as urban area. With the increase of requirement, the second and third frequency point of D band can be directly configured. The Intra-band CA can be used in the future.

• Scenario 2：intra-eNodeB different-coverage

Considering the propagation characteristics of F band, it can be used firstly for outdoor coverage in the general data requirement area such as suburban area. With the increase of requirement, the D band should be allocated. Therefore, the Inter-band CA between D band and F band can be used in the future.

• Scenario 4：macro network + hot-spot coverage

In the dense urban area, wireless environment is more complex. It is difficult to realize continuous macro network coverage by using D band simply. The remote base station need be used to supply blind spot coverage. The Intra-band CA can be used in the future.

6. References

1. 3GPP TR 36.913 V11.0.0, “3rd Generation Partnership Project; Technical Specification Group Radio Access Network; Requirements for further advancements for Evolved Universal Terrestrial Radio Access (E-UTRA) (LTE-Advanced)", http://www.3gpp.org/ftp/specs/archive/36_series/36.913/36913-b00.zip, September 2012.

2. 3GPP TS 36.300 V10.11.0, “3rd Generation Partnership Project; Technical Specification Group Radio Access Network; Evolved Universal Terrestrial Radio Access (E-UTRA) and Evolved Universal Terrestrial Radio Access Network (E-UTRAN); Overall description; Stage 2", http://www.3gpp.org/ftp/specs/archive/36_series/36.300/36300-ab0.zip, September 2013.

3. 3GPP TS 36.101 V12.2.0, “3rd Generation Partnership Project; Technical Specification Group Radio Access Network; Evolved Universal Terrestrial Radio Access (E-UTRA);User Equipment (UE) radio transmission and reception", http://www.3gpp.org/ftp/specs/archive/36_series/36.301/ 36101-c20.zip, December 2013.