Data Processing for 5-element Experiments of Chinese Spectral Radioheliograph

Wei Wang[1], Yihua Yan[1], Donghao Liu[1], Zhijun Chen[1], Fei Liu[1]

[1]Key Laboratory of Solar Activity, National Astronomical Observatories, CAS, Beijing 100012, China
Email: wwang@nao.cas.cn

Abstract

The Chinese Spectral Radioheliograph is under construction in Mingantu Observation station of NAOC, and some experiments have been carried out by 5-element system which has been established in May 2010. This paper described overall system of 5-element briefly and showed some data processing results included observations of weather satellite, GPS satellite and solar.

1. Introduction

The CSRH will be a solar-dedicated radio interferometric array that will be optimized to carry out imaging spectroscopy of the Sun, to produce high spatial resolution (maximum 1.3”), high time resolution (<100ms) and high frequency resolution (about 1%) images of the Sun simultaneously at a wide range of frequencies (Yan et al., 2009). Now, CSRH is under construction and 40 4.5-meters antenna has been mounted in Mingantu Observation station of NAOC. In order to check the whole system, we established 5-element system which included antenna, analog receiver optical fiber link and digital receiver since May 2010. Some experiments have been carried out and some results are described in this paper.

2. Description of 5-element system

The 5-element system includes five 4.5m antennas, LNA (Low Noise Amplifier), Optical transmitter, Optical fiber, optical receiver, radio frequency receiver and digital receiver.

The 5 antenna in this system are selected in center part of 40 positions which is for low frequency array (0.4-2GHz) of CSRH. All the 5 antennas are almost in the E-W direction and the baselines are from about 8 to 243 meters (shown in Fig 1). The element antenna is an equatorial mounted mesh type parabolic dish with f/d ratio of 0.40. The left- and right-handed circular polarization signals are received by feed in 0.4-2GHz range mounted at the prime focus of each dish. A microwave switch is connected to left-handed and right-handed circular polarization port of feed and its output port is connected to LNA with noise figure <1.5dB, gain ~32dB, gain stable ± 1dB in the above frequency range. Optical transmitter and LNA are installed in a front-end constant temperature box controlled by computer in centre control room. The optical signal from each antenna is transmitted to the observation building through each 3.4km long, phase-stable optical fiber which buried 2.5 meters depth under ground. The outputs from optical receiver come into radio frequency receiver in observation room. The amplified RF signal is mixed with two local oscillator signals, then down-converted to a single sideband IF signal (50-450MHz). These signals are digitised using a 10bits,

978-1-4244-6051-9/11/$26.00 ©2011 IEEE

1Gsps digitizier. Every 4ms long data from AD converter are recorded in hard disk at a cadence of 3ms. The recorded data are processed offline using some programs written in IDL. Depended on this programs, we can process these data with different methods and adjust some key parameters.

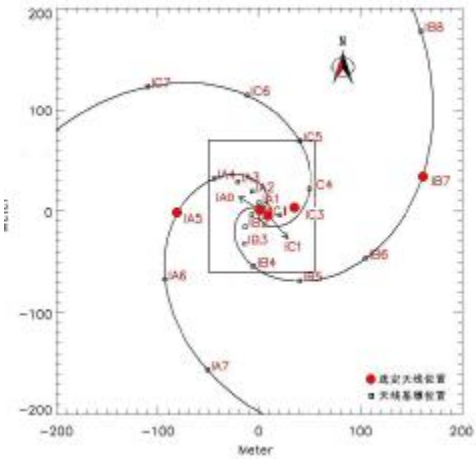

Figure 1. Antenna positions of 5-element system

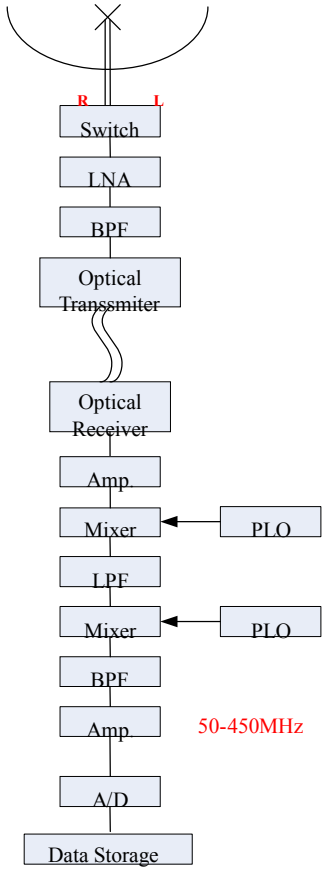

Figure 2, block diagram of 5-element system

3. Observation results

3.1 Observation of a geostationary satellite

Before observing the sun, observation of geostationary satellite was carried out with 5-element system at Mingantu observation station (longitude 115.4° E, latitude 42.2° N) since May 2010.

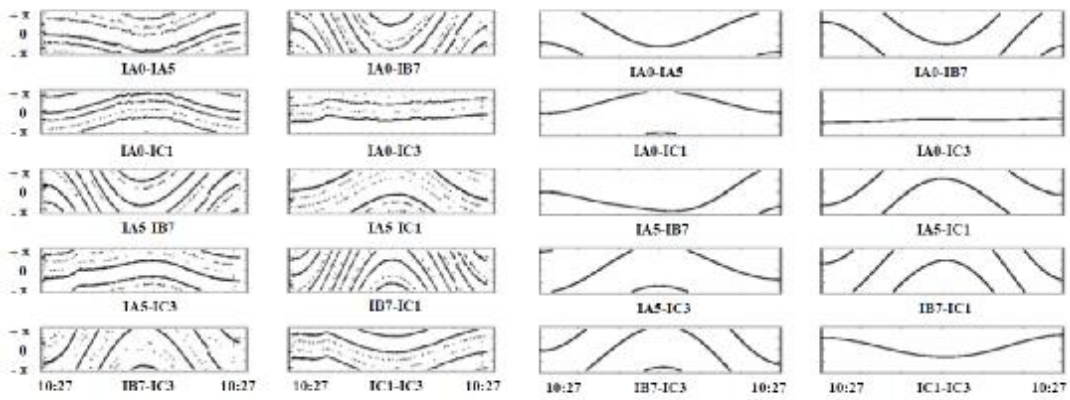

Figure 3. The left panel is observed phase variation with different baseline from10:27 14th to 10:27 15th July, 2010. The right panel is theoretical analysis with different baseline in same time.

5 antennas were all pointing to a geostationary satellite (E123.5) for a 24 hours long time. If spatial resolution is high enough, the phase variation of visibilities would be a curve, not a line because of floating of satellite position. Figure 3 showed the phase variation. Furthermore, this result corresponded well with theoretical analysis.

3.2 Observation of a GPS satellite

Similar to geostationary observation, 5 antennas were all pointing to a position calculated from standard data, and then waiting for GPS over this position. The phase variation of visibilities was shown in figure 4.

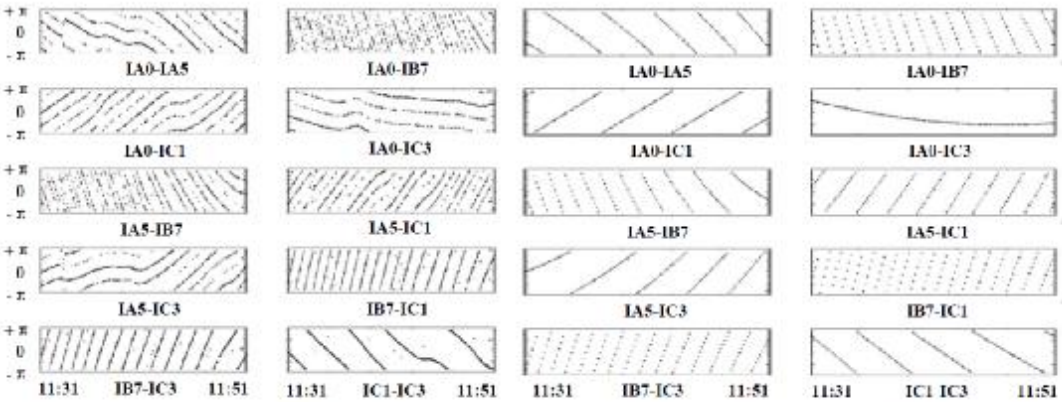

Figure 3, The left panel is observed phase variation with different baseline in 20 minutes.
The right panel is theoretical analysis with different baseline in same time

The Figure 11 shows the phase of the three baselines and closure phase after phase correction. The left panel is result of geostationary satellite and the right panel is of GPS satellite.

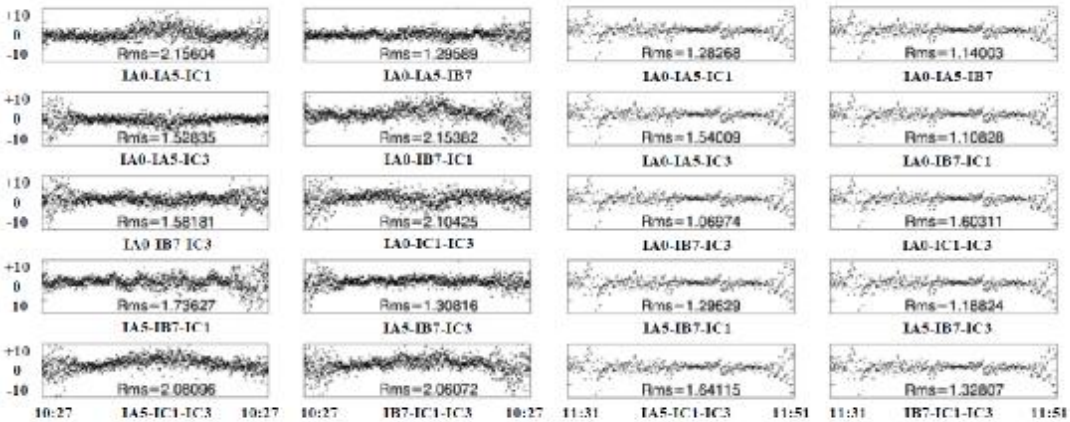

Figure 5, The left panel is phase closure of observational geostationary satellite and the right panel is result of GPS satellite observation.

3.3 Observation of solar burst

The first burst, associated with a C1.5 class X-ray flare, observed by 5-element system was recorded at 07:59-08:20(UT) on Nov. 12th, 2010. Figure 6 shown the fringe observed by antenna IB7 and IC1. The total flux and spectrum from 1.2-1.6 GHz was also shown in panel (b), (c) and (d).

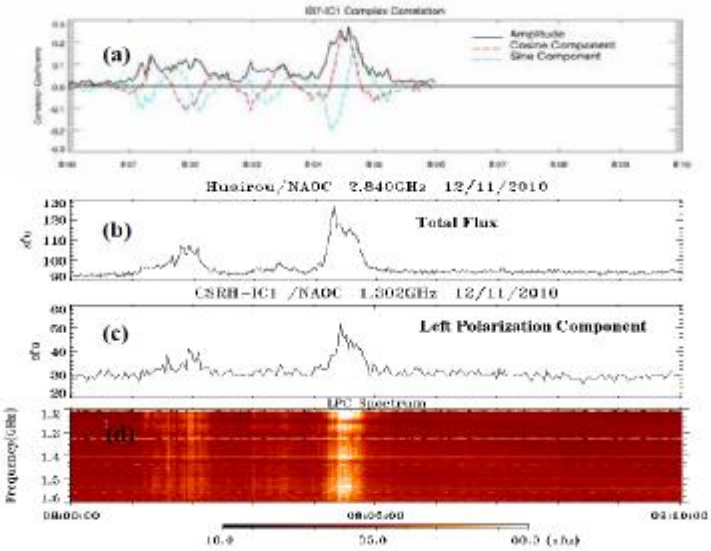

Figure 6, First burst observed by 5-element

Panel a: Observed fringe included Cosine and Sine component with IB7-IC1 baseline. *Panel b:* Total flux profile observed by 2840M spectrometer in Huairou station. *Panel c:* Left polarization component profile observed by antenna IC1. *Panel d:* LPC spectrum observed by antenna IC1.

4. Conclusion

The 5-element experiments of CSRH have been successfully performed in 2010. All observed results are good agreement with theoretical values.

5. Acknowledgments

The data processing and calibration for CSRH project is supported by NSFC (19833050) grants. Profs. Jian Zhang, Shengzhen Jin and Qijun Fu are acknowledged for helpful discussions and comments in this work.

References

1. Yan Yihua, Jian Zhang, Wei Wang, et al., Earth Moon Planet, (2009) 104:97-100
2. Yan, Y., J. Zhang, G. Huang, et al. in Proc. 2004 Asia-Pacific Radio Science Conference, Qingdao, China, eds. Tang, K. & Liu D. (Beijing: IEEE), 391, 2004
3. Liu, Z., Gary, D.E., et al., PASP, 119: 303–317, 2007.
4. Sawant, H.S., Faria, C. et al. Proc. URSI GA2005, J05-P.12(01578)
5. Nishio, M., Nakajima, H. et al. Proc. Kofu Symposium, No.360, 1994
6. Nakajima et al., Proc. of the IEEE, 82, 705, 1994
7. Perley, R.A., A. S. P. Conf. Ser. Vol 180, 275, 298, 1999
8. Zhiwei Liu, Dale E. Gary, et al. PASP 119: 303–317, 2007 March