Development of 4x4 Full-MIMO Channel Sounder Operating at 11 GHz with 400 MHz Bandwidth utilizing Software Radio Architecture

Jun-ichi Takada, ***Yohei Konishi***, ***Boxin Gao***, ***Minseok Kim***, ***Mir Ghoraishi***, ***Satoshi Suyama***, and ***Hiroshi Suzuki***
Graduate School of Science and Engineering, Tokyo Institute of Technology
Meguro-ku, Tokyo 152-8550, Japan. e-mail: takada@ide.titech.ac.jp

Abstract

This paper reports the development of MIMO channel sounder operating at 11 GHz with 400 MHz bandwidth. The sounder utilizes the software radio architecture to measure the full MIMO channels simultaneously, since the same hardware can be also used to test the real-time data transmission.

1 Introduction

To develop super high bit-rate mobile communication systems beyond IMT-Advanced, further increase of frequency bandwidth is crucial in addition to the number of the spatially multiplexed streams in MIMO transmission. To fulfill the demand for bandwidth, it is almost impossible to keep using UHF or lower microwave due to the serious congestion of the spectrum. One possible approach is to utilize higher frequency, i.e. higher microwave band. It is well known that free space propagation loss and shadowing loss are both increasing according to the frequency, which limits communication range. However, it is a big advantage that the size of the antennas are reduced and further spatial multiplexing is possible without increasing the size of the terminal. It should be obviously necessary to operate in the microcellular environment where the channels are more specific to individual environments, compared with the current mobile communication systems operating at UHF.

This study aims at investigating the MIMO propagation characteristics at microwave frequency above 10 GHz. 400 MHz bandwidth has been reserved for the experiments at 11 GHz. By transmitting 64QAM over 24×24 MIMO channel with 400 MHz bandwidth, it is possible to transmit above 30 Gb/s with coding rate 3/4 and efficiency due to MAC overhead is 0.7 [1]. It is still in question whether 24 independent spatial channels can be realized in the real propagation environment. Therefore, it is quite necessary to investigate the spatial properties of the real channels. This paper reports the development of MIMO channel sounder operating at 11 GHz with 400 MHz bandwidth. The sounder utilizes the software radio architecture to measure the full MIMO channels simultaneously, since the same hardware can be also used to test the real-time data transmission. Currently 4×4 MIMO channel sounder has been implemented, and it is under the expansion to 8×24 so as to conduct the directional measurement at Rx.

2 Architecture

The channel sounder under developed in this study is utilizing MIMO software radio architecture. Each antenna is connected to individual transmitter or receiver module. One transmitter or receiver unit consists of 4 to 8 RF ports, and multiple units can cooperate one another in a scalable manner. Reference local signal generated by atomic oscillator for the synchronization is shared among the units.

3 Operation

Multi-tone signal is used for the wideband measurement [2]. Just like OFDM, multi-tone signal is advantageous over the single carrier PN signal from the viewpoint of the spectrum efficiency although peak-

978-1-4244-6051-9/11/$26.00 ©2011 IEEE

Table 1: Specification of MIMO software radio and channel sounding parameters

RF	
Center frequency	11.0 GHz
Transmission power per channel	10 mW
Number of channel per unit	4
Number of unit	6

Baseband	
Sampling rate	400 MHz
Multitone bandwidth	400 MHz
Tone number	2048
Tone separation per channel	195.3 kHz

Transmission mode (T-mode) symbol	
Symbol length	6.12 μs
FFT length	5.12 μs
CP length	1 μs

Propagation mode (P-mode) symbol	
Symbol length	24.48 μs
FFT length	20.48 μs
CP length	4 μs
FDM multiplexing	4
FDM offset	48.8 kHz

Frame format	
Preamble	6 T-mode symbols
Payload	6 T-mode symbols
	6 P-mode symbols

to-average power ratio (PAPR) is higher.

The proposed SR sounder utilizes frequency division multiplexing [3] among the multiple channels within a unit and time division multiplexing among the units. One TDM symbol consists of multitone signal with the length equal to inverse of the FDM tone separation and its cyclic prefix with the length longer than the maximum delay spread.

4 Specification

A high speed MIMO software radio architecture is under the development. The specifications for the channel sounding are summarized in Table 1. Tentatively, a frame format shown in Fig. 1 is considered so that both data transmission and channel sounding can be simultaneously conducted in the field test.

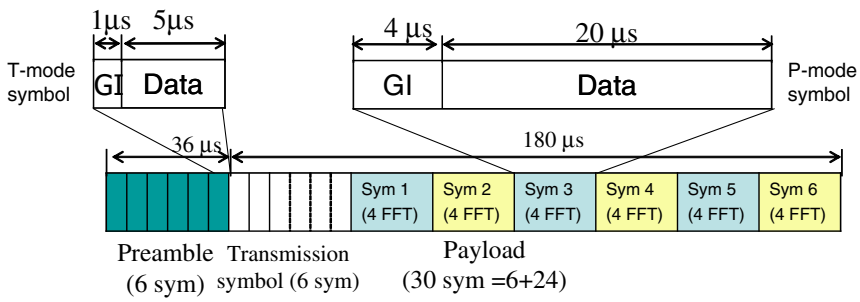

Figure 1: Frame format

5 Calibration

To calibrate the whole MIMO system, the following complicated calibration process is needed whenever the units are turned on [4]:

1. Baseband calibration to match all the channels of DACs and ADCs
   Following are manually adjusted by on-board variable registers.
   (a) Phase and DC offsets of DACs are calibrated by connecting DAC to oscilloscope.
   (b) Phase and DC offsets of ADCs are calibrated by connecting ADC to DAC.
2. RF calibration to compensate IQ imbalance and to suppress carrier leakage
   (a) Transmitter IQ imbalance and carrier leakage are calibrated by connecting DAC to Tx input and spectrum analyser to Tx output. IQ imbalance is calibrated first, and carrier leakage next.
   (b) Receiver IQ imbalance and carrier leakage are calibrated in digital domain by connecting whole baseband and RF chain.
3. System calibration for transfer function
   (a) 4×4 Calibration matrix is obtained by connecting calibration circuit with known S-parameters at both Tx outputs and Rx inputs.

6 Experiments

Some experimental SISO tests are conducted to check the accuracy of the measurement. Figure 2 shows a multipath channel simulator circuit using T-junction and cable. Figure 3 compares the measured impulse responses obtained by the vector network analyzer (VNA) as a reference, and the true value. Although further adjustment is necessary, the resultant responses are in good agreement.

7 Conclusion

This paper presented the current development of MIMO channel sounder operating at 11 GHz with 400 MHz bandwidth, utilizing software radio architecture. Currently, indoor and outdoor field test have been conducted, and the results will be presented in the symposium. By the year of 2012, 24×24 MIMO

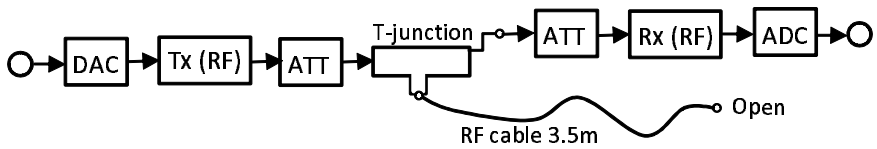

Figure 2: Back to back test using T-junction

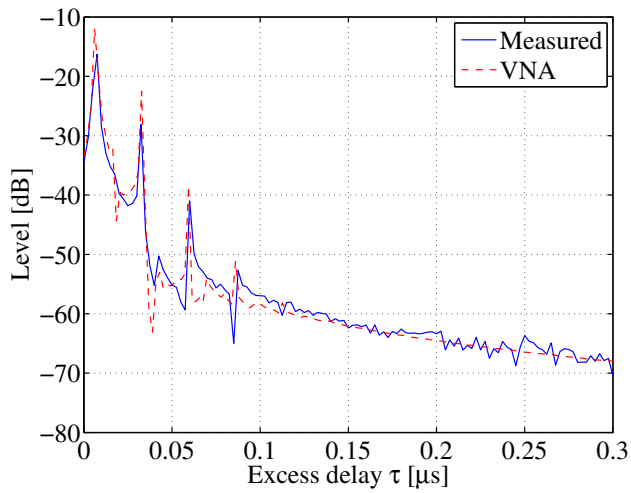

Figure 3: Channel impulse response for Hardware test

channel sounder is planned to be ready, and the field measurements in microcell and picocell environments are planned.

Acknowledgment

This work was partly supported by "The research and development project for expansion of radio spectrum resources" of The Ministry of Internal Affairs and Communications, Japan.

References

[1] H. Suzuki, S. Suyama, and K. Fukawa, "Research topics for super high bit-rate mobile communication systems," in *Proceedings of 2010 IEICE Society Conference*, no. B-5-51, Sep. 2010.

[2] S. Boyd, "Multitone signals with low crest factor," *IEEE Transactions on Circuits and Systems*, vol. 33, no. 10, pp. 1018–1022, Oct. 1986.

[3] K. Sakaguchi, J. Takada, and K. Araki, "A novel architecture for MIMO spatio-temporal channel sounder," *IEICE Transactions on Electronics*, vol. E-86C, no. 3, pp. 436–441, Mar. 2002.

[4] Y. Konishi, M. Kim, M. Ghoraishi, J. Takada, S. Suyama, and H. Suzuki, "Channel sounding technique using mimo software radio architecture," in *Proceedings of 5th European Conference on Antennas and Propagation (EuCAP 2011)*, Apr. 2011.