The Design and Implementation of MST radar at Wuhan, China

Zhengyu Zhao[1], Gang Chen[1], Chen Li[2], Qi Yao[2], Guobin Yang[1], Chen Zhou[1], Yaogai Hu[1], Yuannong Zhang[1]

[1]School of Electronic Information, Wuhan University, 129 Luoyu Road, Wuhan, Hubei, China, dicilab@yahoo.com.cn
[2]Nanjing Nriet Co., Ltd, Nanjing, Jiangsu, China

Abstract

The basic configuration of the Wuhan MST (Mesosphere-Stratosphere-Troposphere) radar, which is currently designed and constructed by School of Electronic Information, Wuhan University, is preliminarily described in this paper. The Wuhan MST radar operates at VHF band preoccupied with the real-time characteristics of turbulence and wind field vector in the height range 1-100km with a high temporal and spatial resolution. The extensive feature of Wuhan MST radar points to the feasibility of low thermosphere if desired. This all solid state, all coherent pulse Doppler radar is the China's first independently development of MST radar focusing at atmospheric observation. The primary subsystems of the Wuhan MST radar include antenna system, feeder line system, all solid state radar transmitters, digital receivers, beam control system, signal processing system, data processing system, product generating system and user terminal. Advanced radar technologies are used, including high reliability all solid state transmitters, low noise large dynamic range digital receivers, active phased array, high speed digital signal processing and real-time graphic terminals.

1. Introduction

The MST radar, which is a large radio remote sensing system, is designed to observe the atmosphere by taking advantage of clear air echoes. When the product of the average power of transmitter and effective aperture area of antenna exceed 108Wm2, the observation height range could cover 2 or 3km to 100km from ground with the limitations of 25-60km range.

The Wuhan MST radar is one of the significant parts of Meridian Space Weather Monitoring Project of China (East hemisphere space environment ground based integrated monitoring meridian chain), which is currently under construction. To be combined with the other existed and under construction ground-based remote sensing facilities, an earth and space environment monitoring base with international influence including multi-level and multi-instrument is developing. The final products of Meridian Space Weather Monitoring Project contain diversity space environment monitoring and forecasting services.

Wuhan MST Radar scientific applications include, 1) Observation of the atmosphere 3-D wind field (DBS/SA mode); 2) Observation of the tropopause waves; 3) Observation of the excitation of atmospheric gravity waves; 4) Observation of the ionic trail; 5) Observation of middle atmospheric horizontal wind field; 6) Measurements of the profile of the atmosphere temperature; 7) Weather application (precipitation, typhoon eye); 8) Observation of the clear air turbulence; 9) Observation of incoherent Scatter Echoes from the Ionosphere; 10) Studies of Field-aligned irregularities (FAI).

The Wuhan MST radar is located at Chongyang, Wuhan, Hubei, China. The geographic coordinates is 114°8'8"E, 29°31'58"N and the occupancy area is 10000m^2. The primary subsystems include antenna system, feeder line system, all solid state radar transmitters, digital receivers, beam control system, signal processing system, data processing system, product generating system and user terminal.

The principles of Wuhan MST radar is as follows. The high frequency pulse signals are generate by the main controlling computer. This signals are firstly amplified by the phase shifters in the T/R modules, radiated by the antenna feeder, then synthesized in space in order to concentrate the energy in a certain direction. The radio signals are backscattered by the atmospheric turbulence, parts of which are detected by the radar receiving antennas. The receiving signals are filtered, amplified, phase shifted, synthesized in the T/R modules before they are transmitted to the digital IF receivers. At the digital IF receivers the signals are filtered, amplified, cross phase detected and finally computed by the signal processor for FFT transformation. The turbulent echo power spectrum is obtained through the above approaches, from which the atmospheric wind fields are inverted and obtained.

The overall block diagram of Wuhan MST radar system is presented as figure 1.

978-1-4244-6051-9/11/$26.00 ©2011 IEEE

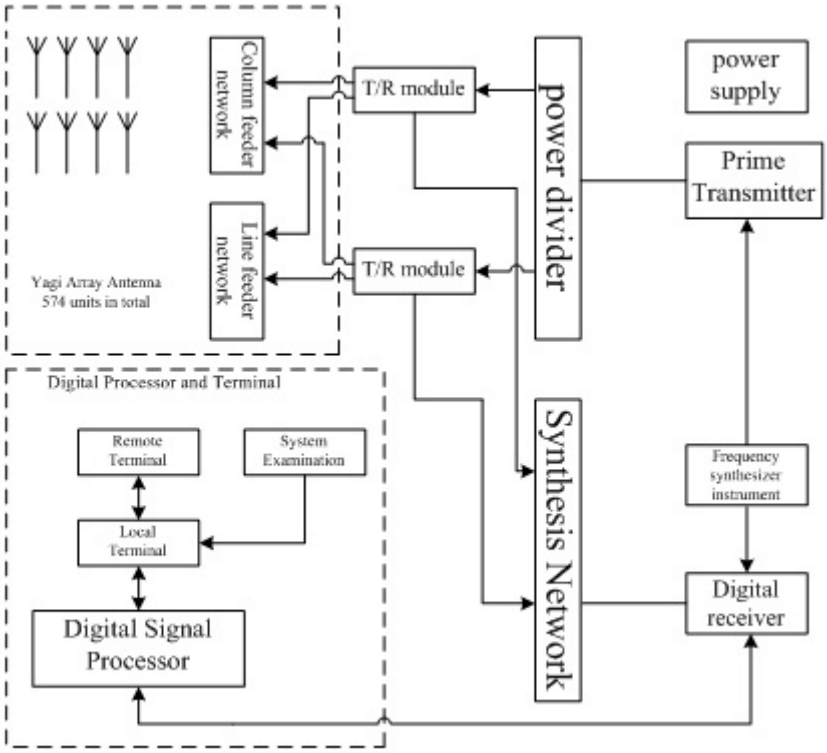

Figure 1. The overall block diagram of Wuhan MST radar system

2. Main Technical Features of Wuhan MST Radar

The Wuhan MST Radar is a 53.8 MHz pulse – modulated monostatic Doppler radar with an active phase array system, which have two main functions of radio distance measurement and Doppler velocity measurement. The whole signal processing works in the frequency domain and frequency spectrum of the echo pulse sequences are analyzed so that the problem of clutter suppression is solved completely. Considering the second return ambiguity, interference and distant side lobe of atmospheric turbulence due to the pulse compression, complementary binary pseudo-random sequence phase encoding technique is used in Wuhan MST radar.

The radar antenna system is making up of 24*24 Yagi units. The T/R modules which are connected to the fully distributed array can be categorized into two major types. The total number of T/R modules is 600, installed in 152 component kit located in the antenna array. The overall power of radiation is 0.3kW×576>170kW with uniform weighting feeding. To ensure the low side-lobe feature in the scanning direction, one dimension weighting is used for receiving. The beam routinely scans from zenith point, 15° by east, 15° by west, 15° by south, 15° by north, five directions in total which is controlled by the beam control subsystem. The echoes is amplified by the receiving channel, then transmitted to the receiver and signal processing subsystem so that the echoes are processed and analyzed into more useful data.

There two types of T/R module utilized in Wuhan MST radar. One type T/R module includes the phase shifter and low noise amplifier with total number of 24 which is bigger, the other type only includes power amplifier with total number 576. The bigger T/R module is the core device of the active phased array with the purpose of power amplification and echo signal amplification.

The five digits digital phase shifter is utilized in order to improve the accuracy of the phase shifting and the beam direction adjusting. The status of the transmitter power and phase shift is instantly monitoring by the beam controlling system in order to improve the system reliability and the convenience of system maintenance. Because the maximum duty cycle is 20%, the forced wind cooling technique is applied for the T/R module. The backscatter echoes received by the radar receivers are so weak that most signals are lower than the noise level. Consequently the requirements for the receivers are very high. Digital IF (intermediate frequency) technique is utilized in Wuhan MST radar. By taking advantage of direct digital sampling and phase detecting in digital domain, the phase orthogonality and amplitude consistency are guaranteed, thus greatly improving the observation accuracy

and make equipment more stable and reliable. The receiver is consisted of frequency source, receiving channel, low noise amplification, test signal source, error location and receiver port. Radio frequency which is delivered from antenna synthesized network is mixed in receiver channel, then processed in digital intermediate frequency system through digital controlling attenuation. Finally I/Q output data is transmitted to the signal processor.
The atmospheric echoes are extremely weak. In order to get a better result, the processor is capable of capturing the weak echoes and is of high estimated accuracy. The performance of radar is based on the capability of signal processor, which is one of the key parts of the MST radar. Special DSP chip is adopted to the Wuhan MST radar where coded pulse compression, coherent averaging, FFT, clutter suppression and spectrum averaging are fulfilled. The echo power spectrum which is the output of the signal processor is the source of subsequent data processing, therefore the accuracy of signal processing directly influence the validity and reliability of the secondary product.
The spectrum data of wind field obtained from the radar signal processing is transmitted to radar data processing by PCI bus. The main function of data processing includes: (1) System control, providing the friendly interface and reliable controlling; (2) Preference of working parameter and observation mode; (3) spectrum data processing, mode recognition, moments calculation, quality control; (4) real-time display of the processing results; (5) radar working state monitoring; (6)transmission and communication.

The technical parameters and performance parameters are presented in table 1 and table 2.

3. Conclusion

The Wuhan MST radar is the China's first independently development of this type facility which provide great capability of monitoring the middle and upper atmosphere dynamic process.

The major scientific targets of Wuhan MST radar includes 1) obtaining 3-dimensional wind velocity vectors continuously and accurately in both spatial and temporal domain above Wuhan; 2) clarifying response of the mesosphere to the forcing mechanisms originating in lower atmospheric region; 3) monitoring atmospheric environment; 4) identifying various dynamical processes occurring in the atmosphere; 5) developing meteorological applications; 6) accounting for the mechanisms of radio propagation and scattering in the turbulence atmosphere.

The preliminary results of Wuhan MST radar is now processing and will be introduced in the following paper.

Table 1. Wuhan MST Radar Technical Parameter

Aspect	Specifications
Radar system	All coherent pulse Doppler radar
Operating frequency	53.8MHz(λ=5.576m)
Power Synthesis	All solid state , Fully distributed
Peak Power	≥172kW
Duty Cycle	Low mode 10% Medium mode 20% High mode 20%
Antenna	
Antenna array	24×24,active phased array
Antenna type	Yagi aerial, 3 units, horizontal polarization
Normal beam width	≤4.5°half-power width, pencil beam
Minor Side Lobe Level	≤-20dB
Far Lobe Level	≤-30dB (not including 45°)
Voltage Standing Wave Ratio (antenna feeder line)	≤1.1
Beam Conversion Mode	Electrical control
Beam Direction	Five beams, vertex, by east, by west, by south, by north, online adjustable between 0°- 20°
Antenna Operation Mode	Doppler beam sharpening
Antenna Control Mode	Local/Remote

Table 2. Wuhan MST Radar Performance Parameters

Aspect	Specifications
Monitoring height range	Low mode 3.5-10km Medium mode 11-25km High mode 60-90km
Height resolution	Low mode 150m Medium mode ≤600m High mode ≤1500m
Maximum radial velocity	≥35 m/s
radial velocity resolution	≤0.2 m/s
temporal resolution	≤30min
Spatial scope of wind direction	0-360°
Power aperture product	$\geq 2.3\times 10^{8} Wm^{2}$
Main products	3-D Atmospheric wind fields SNR Power spectral density Backscatter power

4. Acknowledgments

The authors would like to appreciate the great help of the experts and colleagues of Meridian Space Weather Monitoring Project.

5. References

1. J. Forbes, "MST radar detection of middle atmosphere tides", *Radio Sci.*, 1985, 20(6), pp. 1435-1440.

2. S.Fukao, S. Kato, T. Aso, M. Sasada, and T. Makihira, "Middle and upper atmosphere radar (MUR) under design in Japan", *Radio Sci.*, 1980, 15(2), pp. 225-231.

3. K. Gage, and B. Balsley, "On the scattering and reflection mechanisms contributing to clear air radar echoes from the troposphere, stratosphere, and mesosphere", *Radio Sci.*, 1980, 15(2), pp. 243-257.

4. W. K. Hocking, "Recent advances in radar instrumentation and techniques for studies of the mesosphere, stratosphere, and troposphere", *Radio Sci.*, 1997, 32(6), pp. 2241-2270.

5. R. F. Woodman, "Spectral moment estimation in MST radars", *Radio Sci.*, 1985, 20(6), pp. 1185–1195.

6. C. H. Liu, J. Röttger, C. J. Pan, and S. J. Franke, "A model for spaced antenna observational mode for MST radars", *Radio Sci.*, 1990, 25(4), pp. 551–563.

7. M. P. Sulzer and R. F. Woodman, "Quasi-complementary codes: A new technique for MST radar sounding", *Radio Sci.*, 1984, 19(1), pp. 337–344.