Measurement of Spurious Interference Effects Due to the Excitation of Low Frequency Leaky Modes in a Covered Microstrip

***J. Bernal*[1], *F.Mesa*[2], *D.R. Jackson*[3], *S. Saucedo*[1], *M. Velázquez*[4]**

[1]Dept. of Applied Physics 3, University of Seville, ETS de Ingeniería, Camino de los descubrimientos s/n, 41092–Seville, Spain, jbmendez@us.es

[2]Dept. of Applied Physics 1, University of Seville, ETS de Ingeniería Informática, Avda. Reina Mercedes s/n, 41012–Seville, Spain, mesa@us.es

[3]Dept. of Electrical and Computer Engr., University of Houston. Houston, TX 77204-4005, USA, djackson@uh.edu

[4]Dept.Electronics and Electromagnetism, Avda. Reina Mercedes s/n, 41012–Seville, Spain, velazquez@us.es

Abstract

This work studies the excitation of a physical leaky mode in a covered microstrip structure at low frequencies. A covered microstrip is a microstrip structure with a metallic top cover. This metallic top cover may be present in a microstrip structure due to a circuit package. Our previous numerical results have shown that for a sufficiently small top cover height a leaky mode can be excited on this structure at low frequencies. The interference between this leaky mode and the bound mode of the structure can cause spurious effects in the signal transmitted by the line. Thus, the objective of this work is to verify experimentally those numerical results. To do this we have designed and fabricated an experimental prototype of a covered microstrip line. For that structure our numerical analysis predicts an important destructive interference effect in the transmitted signal at a given (low) frequency. This will be verified by using a commercial electromagnetic simulator and by experimental measurements.

1. Introduction

High-frequency effects for guiding structures are often associated with the excitation of a leaky mode (LM) as well as other constitutive components of the continuous spectrum (CS) of the signal [1]. At low frequency the situation is often much simpler since the currents and fields are usually dominated by the bound mode (BM). In this case the low-frequency distortion of the signal is expected to be mainly associated with the frequency dispersion of the BM propagation characteristics, which can be accounted for by conventional transmission-line theory along with CAD formulas.

In practice, microstrip lines are in microwave circuits that are often placed into packages that include a metallic top cover. An effect of the top cover is to raise the phase constant of the dominant TM_0 surface wave of the background waveguide (*i.e.*, a parallel-plate inhomogeneous waveguide mode) and, consequently, to lower the frequency at which physical leakage begins [2]. In fact, leakage at all frequencies is possible for a sufficiently small cover height. In this situation spurious effects associated with the low-frequency excitation of a LM should be expected.

The influence of the top cover of the package on the excitation of leaky modes has been previously studied in the frequency domain in [2,3]. Also, a time-domain study of the effect of the top cover has been recently reported by some of the authors of this paper in [4]. As shown in [4], for a small top cover height the LM component of the signal is dominant for the low-frequency part of the spectrum while the BM component is dominant for higher frequencies. This causes splitting of the pulse as it propagates. However, these numerical results have not yet been validated by experimental measurements. In the present work we complete the study in [2,4] by providing experimental evidence of the excitation of a leaky mode at low frequency. We have found a strong signal attenuation at a certain frequency due to the destructive interference between the BM and the dominant LM. This signal attenuation has been measured and compared with our numerical results, finding a very good agreement. A good agreement has been also found with the results provided by a commercial electromagnetic simulator (CST Microwave Studio).

2. Analysis

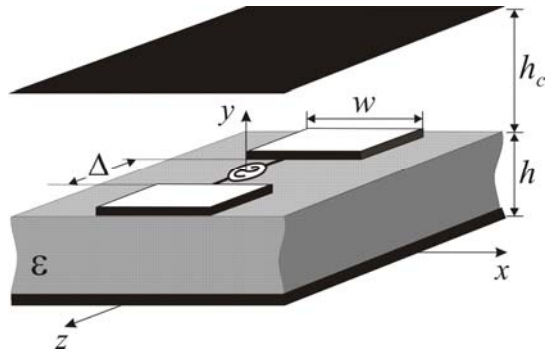

Fig. 1. Geometry of an infinite covered microstrip transmission line fed by a 1-V gap voltage source.

Fig. 1 shows a picture of the structure under consideration. This structure can be analyzed via a Mixed Potential Integral Equation (MPIE) scheme such as that previously employed by the authors [4,5]. Both a 2D analysis and a 3D analysis that includes the delta-gap voltage source can be carried out with this scheme. The reader is referred to [4] and references therein for further details. In this method, the frequency-domain current due to the gap voltage source on the transmission line is obtained from a spatial inverse Fourier transform. By deforming the integration path it is possible to decompose the total current into its components, namely the current associated with the bound-mode and the continuous-spectrum current [1,6]. The bound mode is the mode that is accounted for by transmission-line theory for uncovered structures. However, at high frequencies or for covered structures, the amplitude of the bound mode is not accurately predicted by transmission-line theory. The CS current corresponds to a reactive and/or radiating type of current that is not accounted for by transmission-line theory. The CS current can be decomposed into two additional components: the physical LM current and the so-called residual-wave current. The physical LM current includes the contribution of all the physical leaky modes existing at a given frequency [1].

Since the vector network analyzer will provide a measure of the voltage at the end of the line, we need to calculate this voltage from the currents provided by our method. This voltage is calculated as the path integral of the electric field between the strip and the ground plane. This electric field is calculated from the already available currents and the Green's functions of the line.

3. Results

To provide an experimental proof of the existence of a dominant leaky mode in the covered microstrip structure, we have fabricated and measured a covered microstrip line with w = 4.29 mm, h = 1.524 mm, h_c = 0.5 mm and ε_r = 2.55. The length of the line is 12 cm. The strip width has been chosen to give a characteristic impedance of 50 Ω for the open (uncovered) microstrip.

As a first step we have calculated and presented in Fig. 2 the dispersion diagram of this covered microstrip by using the 2D integral-equation method described above. In this figure the quasi-TEM phase constant is represented as a single black cross on the vertical axis. This wavenumber is computed from the quasi-TEM C and L p.u.l. parameters of the line via the quasi-TEM approach reported in [7]. At low frequency, it can be observed that the phase constant of the LM approaches the quasi-TEM value whereas, due to the raising of the phase constant of the TM_0 wavenumber, the BM wavenumber (which stays above the TM_0 wavenumber) is far from that value. Note also that the attenuation constant of the LM tends to zero as the frequency decreases. Therefore, at low frequencies the fields and currents of the LM are expected to resemble those corresponding to the quasi-TEM limit. This unusual behavior suggests that the LM fields and currents are actually carrying most of the signal energy at low frequency.

However, the situation changes as frequency increases. This can be seen in Fig. 3. This figure shows the magnitude of the total current (TC) on the line (at a location 12 cm from the source) versus frequency. These data have been calculated by including a delta-gap voltage source in the analysis (3D analysis). The BM, CS and LM components of the current are also shown in Fig. 3. These curves show that the LM current dominates the CS current. The LM current is also the dominant component of the TC at low frequency, as expected from the previous discussion. However, as frequency increases the BM component becomes more important and gradually dominates the TC for higher frequencies. As a consequence, there should be a range of frequencies where the BM and LM components have similar magnitudes. In this region strong interference effects may appear. In fact, Fig. 3 shows a strong attenuation of the TC around 6 GHz that can be attributed to destructive interference between the bound and leaky modes. To experimentally verify this point, an Agilent E8363B analyzer was used to measure the magnitude of S_{21} from 3 GHz up to 7 GHz.

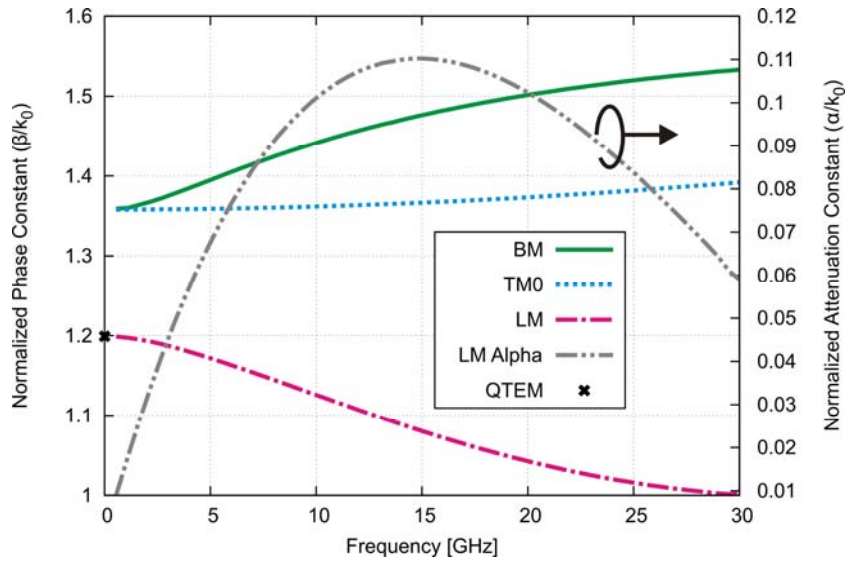

Fig. 2. Dispersion diagram for a covered microstrip transmission line with w = 4.29 mm, h = 1.524 mm, h_c = 0.5 mm and ε_r = 2.55.

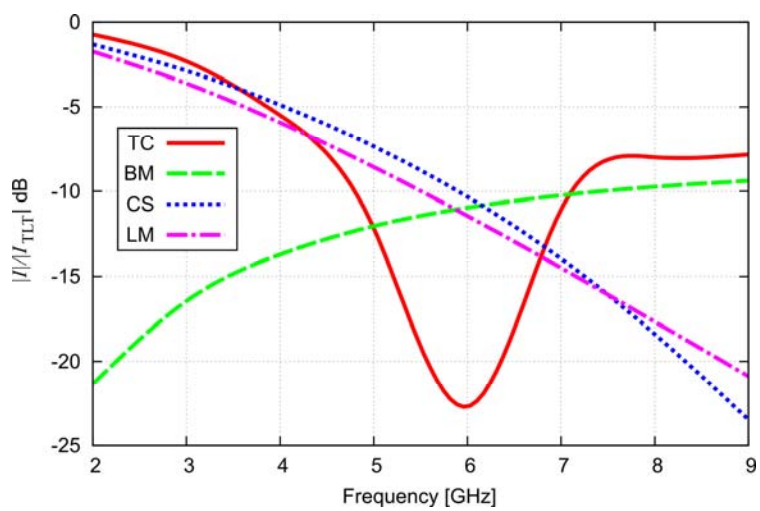

Fig. 3. Frequency behavior of the magnitude of the total current (TC) and its BM, CS and LM components 12 cm from the source for a covered microstrip with w = 4.29mm, h = 1.524 mm, h_c = 0.5 mm and ε_r = 2.55.

In Fig. 4 we have plotted the measured $|S_{12}|$ for this covered microstrip structure along with the results provided by our integral-equation method. Also, the results provided by the CST Microwave Studio software are represented in that figure. To avoid unwanted interferences due to the waves reflected by the boundaries of the metallic top cover we have imposed absorbing conditions around these boundaries in the CST model of the structure. Also, in our experimental setup we have placed an absorbing material around the boundaries of the metallic cover. This greatly reduces the reflections, leaving only a small rippling in the output signal. Fig. 4 shows that there is a pronounced dip in the $|S_{12}|$ around 6 GHz, as expected. A good agreement is seen between the calculated and the measured results.

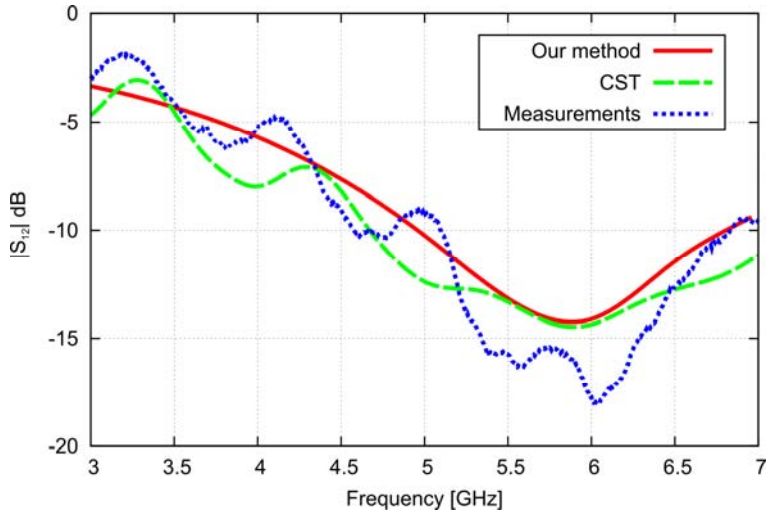

Fig. 4. Calculated and measured values of $|S_{21}|$ versus frequency for a covered microstrip line with w = 4.29mm, h = 1.524 mm, h_c = 0.5 mm and ε_r = 2.55.

5. Conclusion

In this work we provide experimental evidence of the excitation of a physical leaky mode on a covered microstrip line at low frequencies. The analysis of the excitation of the line by a delta-gap voltage source shows that the LM current can actually become the dominant component of the current at low frequencies for a sufficiently small top-cover height. This leaky mode could therefore be strongly excited by a source intended to excite the quasi-TEM mode on the line, thus leading to spurious effects such as interference, radiation, and power loss on the line. A destructive interference effect between the BM and the LM excited in a covered microstrip line has been predicted and measured.

Finally, it is interesting to point out that since the fields associated with the leaky mode grows as the lateral distance from the conducting strip increases, additional unexpected effects such as coupling and crosstalk with adjacent lines might also appear in this type of structure.

6. References

1. C. Di Nallo, F. Mesa, and D. R. Jackson "Excitation of leaky modes on multilayer stripline structures," *IEEE Trans. Microwave Theory and Tech.*, vol. 46, no. 8, pp. 1062-1071, Aug. 1998.

2. F. Mesa, A. A. Oliner, D. R. Jackson, and M. J. Freire, "The influence of a top cover on the leakage from microstrip line," *IEEE Trans. Microwave Theory and Tech.*, vol. 48, no. 12, pp. 2240-2248, Dec. 2000.

3. A. A. Oliner, "Package effects caused by leaky modes at higher frequencies in microwave integrated circuits," *Proc. 29th Europen microwave Conf.*, Munich, Germany, Oct.4-8, 1999.

4. J. Bernal, F. Mesa, D. R. Jackson, W. L. Langston and J. T. Williams "High-frequency pulse distortion on a lossy microstrip line with a top cover," *IEEE Trans. Microw. Theory and Tech.*, vol. 58, no. 7, pp. 1774-1785, Jul. 2010.

5. K. A. Michalski and J. R. Mosig, "Multilayered media Green's functions in integral equation formulations," *IEEE Trans. Antennas Propagat.*, vol. 45, pp. 508–519, Mar. 1997.

6. D. R. Jackson, F. Mesa, M. J. Freire, D. P. Nyquist, and C. Di Nallo, "An excitation theory for bound modes, leaky modes, and residual-wave currents on stripline structures," *Radio Sci.*, vol. 35, n. 2, pp. 495-510, March-April 2000.

7. J. Bernal, F. Medina and M. Horno "Quick quasi–TEM analysis of multiconductor transmission lines with rectangular cross section," *IEEE Trans. Microwave Theory Tech.*, vol. 45, no. 9, pp. 1619-1626, Sep. 1997.