Metamaterial Waveguide with Loss Compensation

Caner Guclu, Shiji Pan, Payman Nazari, Byung-Kwan Chun, Leland Gilreath, Payam Heydari, and Filippo Capolino

University of California, Irvine – Irvine, CA 92697 USA

cguclu@uci.edu, shijip@uci.edu, pnazari@uci.edu, bchun@uci.edu, lgilreat@uci.edu, payam@uci.edu, f.capolino@uci.edu

Abstract

This paper presents a silicon-based waveguide structure employing split ring resonators (SRRs) and distributed loss compensation mechanism suitable for fabrication. Higher phase constant is obtained by periodically loading waveguide (WG) with SRRs in sub-wavelength dimensions at the cost of extra large amount of losses. To relieve the losses problem, a circuitry is introduced in each SRR to compensate the loss while retaining the high phase constant achieved around the resonant frequency. This proposed waveguide with SRRs whose losses are compensated shows higher phase constant, lower attenuation constant and additional tunability compared to common waveguide.

1. Introduction

The development of integrated circuits promises to achieve fast a higher frequency of operation in microwave and millimeter wave (mm-Wave) frequencies. Guided-wave structures are essential for high frequencies design. To achieve high performance in limited area, low loss and miniaturized waveguiding structures are required. The performance of on-chip component is strongly restricted by fabrication specifications. And limited flexibility due to thin dielectric thickness makes it harder to improve the performance with regular transmission line designs. New structures should be brought to alleviate the performance such as defected grounds [1].

SRRs, being essential components of left hand materials, are studied extensively in the literature. Numerical simulations to study the properties of transmission property [2], effective parameters [3], and magnetic resonances of SRRs [4] were reported. The studies on SRRs are performed at different frequency regime, from multi-gigahertz (GHz) to terahertz (THz) frequencies [5], both experimentally and theoretically. Including SRR in the guided-wave structure design can change the wave propagation property along the wave travelling direction and implicitly alter the equivalent circuit model of the total structure and more importantly, the propagation constant.

In this work, the SRRs are used as loading elements along waveguide, which implicitly changes the propagation constant and the equivalent per-length capacitance and inductance of the structure. Similar to slow wave structure [1], the proposed structure shows improved phase constant and with proper sizing, adjustable characteristic impedance could be realized. The coupling of the fields with SRRs that are placed periodically, results in a high phase constant. However, additional losses are introduced and therefore degrade the attenuation property of the structure.

While achieving the short wavelength, it is vital not to lose the power of the propagating wave. Distributed amplification is shown in [6] to overcome this difficulty. In our design, since the loss caused by the currents inside the SRR increases around the resonant frequency where the desired behavior is observed, a loss compensation mechanism is employed. The idea is to use component connected to the SRRs. All in all, SRRs function not only as a loading element to the waveguide and also as an interconnection of the loss compensation circuit. Results show that the compensation technique effectively decreases the attenuation constant and further improves the phase constant in a narrow band. Another loss compensation method due to SRR can be found in [7] implemented by an active gain material for near infrared frequencies.

978-1-4244-6051-9/11/$26.00 ©2011 IEEE

2. Waveguide with SRR and Active Circuit

The dimension of SRR is optimized to resonate around the frequency band of interest. The SRRs are integrated tightly with the waveguide. The loss due to the currents flowing through SRR is compensated by adding loss compensator connected to the ends at the gap of the SRR (Figure 1). The simulations are performed with commercial software that implements the finite-element method. The phase and attenuation constants are compared with the performance of passive and active structures tuned to operating at the same frequencies in Figure 2 and Figure 3.

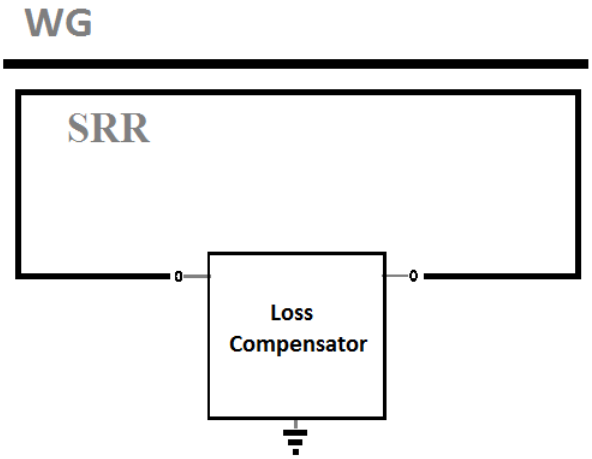

Figure 1.The schematic of the integration of the WG and the SRR with loss compensator.

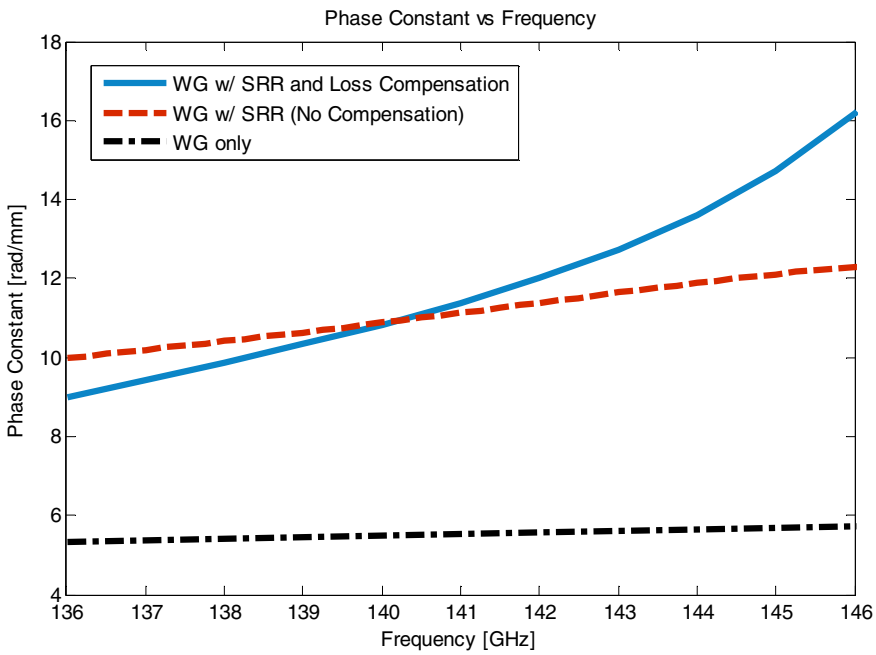

Figure 2.The comparison of the phase constant of the basis WG, of the WG with the passive SRR, and the WG with the compensated SRR.

The effect of SRR can be observed throughout the frequency band. The placement of SRR simply loads the line changing the capacitance and inductance per length. This results in the variation of the characteristic impedance and the phase constant. Around the resonant frequency of the SRR, the effective permeability and permittivity of the structure have strong frequency dependence yielding to the high phase constant. This creates the opportunity for designing a slow wave transmission line

In Figure 3, the attenuation constants for the waveguide with various structures are compared. As clearly seen, the attenuation constant is greatly relieved and even lower than the regular wave guide for a narrow frequency range.

And among this frequency range, the phase constant of the compensated structure is more than twice that of the regular waveguide.

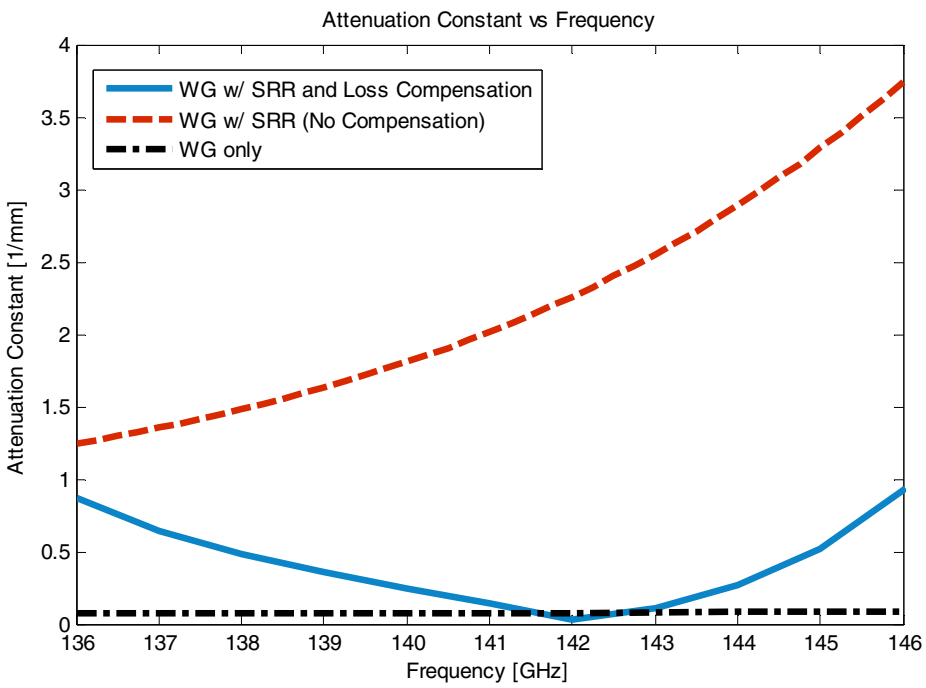

Figure 3.The comparison of the attenuation constant of the basis WG, of the WG with the passive SRR, and the WG with the loss-compensated SRR.

3. Conclusions

The integration of SRR and the loss compensator with the WG in a distributed manner exhibits promising performance. It is shown that integration SRR in waveguide design improves the phase constant of waveguide at a cost of additional losses introduced. Meanwhile, compensation technique could effectively relieve the losses issue.

4. Acknowledgement

The authors would like to thank Semiconductor Research Cooperation (SRC) –GRC for supporting this project with grant 2009-VJ-1962.

5. References

1. C.-C. Wang, Z. Chen, V. Jain, P. Heydari, "A 80-92-GHz Receiver Front-End Using Slow-Wave Transmission Lines in 65nm CMOS," *Compound Semiconductor Integrated Circuit Symposium (CSICS), 2010 IEEE* , pp.1-4, 3-6 Oct. 2010

2. R. Shelby, D. Smith, S. Nemat-Nasser, and S. Schultz, "Microwave Transmission through a two-dimensional, isotropic, left-handed metamaterial," *Appl. Phys. Lett.,* **78,** no. 4, pp. 489–491, Jan. 2001

3. P. Markos and C. M. Soukoulis, "Transmission properties and effective electromagnetic parameters of double negative materials," *Opt. Exp.* **11**, 649, 2003

4. P. Gay-Balmaz and O. J. F. Martin, "Electromagnetic resonances in individual and coupled split-ring resonators," *J. Appl. Phys*., **92**, pp. 2929–2936, Sept. 2002

5. H. Moser, B. Casse, O. Wilhelmi, and B. Saw, "Terahertz response of a microfabricated rod-split-ring-resonator electromagnetic metamaterial', *Phys. Rev. Lett*., 2005, **94**, paper no. 063901

6. C. Lu, A.-V.H. Pham, D. Livezey,, “Development of multiband phase shifters in 180-nm RF CMOS technology with active loss compensation,” *Microwave Theory and Techniques, IEEE Transactions on* , **54**, no.1, pp. 40- 45, Jan. 2006.

7. A. Fang, Th. Koschny, M. Wegener, and C. M. Soukoulis, “Self-consistent calculation of metamaterials with gain,” *Phys. Rev. B, Rapid Communications,* **241104(R)**, June 2009