Silicon CMOS Detectors and Focal-Plane Arrays for THz radiation

Alvydas Lisauskas[1], Sebastian Boppel[2], Viktor Krozer[3], and Hartmut G. Roskos[4]

[1]Physikalisches Institut, Goethe-Universität, Frankfurt am Main, Max-von-Laue-Str. 1, D-60438 Frankfurt am Main, Germany, Tel.: +49-69-798-47211, Fax: +49-69-798-47221, email: lisauskas@physik.uni-frankfurt.de

[2]Same address, Tel.: +49-69-798-47211, email: boppel@physik.uni-frankfurt.de

[3]Same address, Tel.: +49-69-798-47212, email: krozer@physik.uni-frankfurt.de

[4]Same address, Tel.: +49-69-798-47214, email: roskos@physik.uni-frankfurt.de

Abstract

The application of field-effect transistors for the detection of terahertz radiation (submillimeter-wave radiation), which for a long time has only been a subject of academic study, is currently in the process of becoming a viable technology for the realization of focal-plane arrays of room-temperature-operated imaging systems, and has the potential to be of interest also for other applications such as data communications. This development has been triggered on one hand by the fact that the detectors can be implemented entirely in silicon CMOS process technology, with all the advantages of cost-effectiveness, high yield and high reliability, and ease of integration of additional functions, for which CMOS technology stands. The second decisive factor is that the relevant figures of merit - the responsivity and the noise-equivalent power – are comparable to, if not better than, those of other well-established terahertz detectors operated at room temperature. This paper presents a summary of recent results which demonstrate the capability of the technology.

1. Introduction

This paper deals with field-effect transistors (FETs) which are used as detectors of terahertz (THz) radiation whose frequency is much higher than the transit-time-limited cut-off frequency of the transistors themselves. The mechanism on which the FETs operate is plasmonic mixing in the transistor's channel which was first considered and suggested as a rectifying detection principle by Dyakonov and Shur [1]. After a considerable amount of work on III/V transistors [2], the tentative experimental quantification of the responsivity and noise-equivalent power (NEP) at 700 GHz in commercial silicon MOSFETs [3] in 2006 by the group of W. Knap, Monpellier, represented a major milestone for the recognition of the practical potential of this detector concept. The first application for imaging at 600 GHz with GaAs HEMTs [4] and the first development of CMOS focal-plane arrays (FPAs) with monolithically integrated antennas and amplifiers [5,6] soon followed. The performance of the MOSFETs as detectors profits from the low noise resulting from the zero source-drain-bias operation.

A focus of the physics-oriented work on FETs has always been the observation of fully developed plasma-wave phenomena in the FETs, with the development of standing plasma waves in the channel, which should be associated with a very high, resonantly enhanced responsivity of the devices to THz radiation. High-carrier-mobility HEMTs display this resonant behavior pronouncedly at low temperature [2]. Silicon CMOS transistors at room-temperature, on the other hand, usually do not, because the plasma waves decay on a length scale of a few ten nm, shorter than or comparable to the FET's gate length [2,5,6]. Standing waves cannot build up or are weakly developed. Still, mixing is found to be effective enough even in these CMOS transistors to be of high practical interest.

Refs. [5,6] pointed out that plasma-wave-based rectification in the non-resonant limit can be understood to be an extension of classical resistive mixing, well-known from the quasi-stationary behavior of FETs, to the non-quasi-stationary case, as expressed now in the newly adopted terminology of *distributed resistive self-mixing*. This relationship is illustrated in Fig. 1. The upper panel shows a classical resistive mixer arrangement where the coupling of the THz radiation to both the gate and the drain contacts leads to square-law rectification. The lower panel displays the equivalent-circuit representation of non-resonant plasmonic mixing which can be described as a distributed mixing effect occurring along a RC-waveguide representation of the FET's channel. This representation is very useful for integration in circuit simulators.

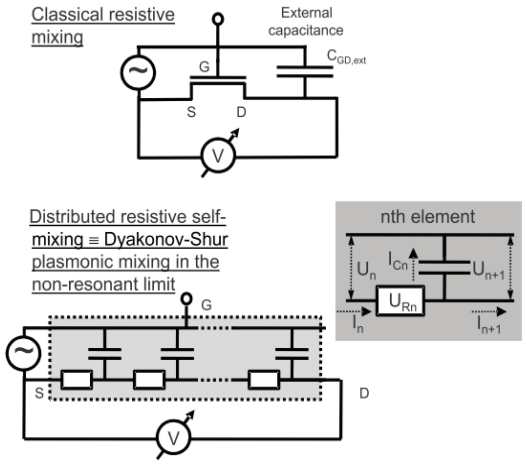

Fig. 1. (From [5]) Upper panel: Basic circuit for classical resistive mixing with a FET. The radiation field is coupled to both the gate and, through a shunt capacitance, to the drain contacts turning the transistor into a rectifying power detector. Lower panel: RC waveguide representation of distributed resistive self-mixing. The gray area of the waveguide indicates the transistor's channel. Dark-gray inset: RC waveguide unit cell.

2. Power Detection

We initially implemented a 3x5 FPA of Si NMOS FET detectors for 0.65 THz fabricated in a commercial quarter-micron technology (see Fig. 2) [5-7]. Each pixel consisted of a narrow-band patch antenna including an integrated groundplane, a differential NMOS FET pair, and a 43-dB voltage amplifier with a 1.6 MHz bandwidth. The transistors had a cutoff frequency of f_T = 35 GHz. The radiation was shielded from the doped and hence lossy substrate by a metal layer which represents the groundplane of the patch antennas. It was only open to the substrate at the locations of the transistors and the protection diodes. For these detectors, we measured responsivities between 70-80 kV/W at gate voltage around 0.2 V, while the best NEP values were 300 pW/√Hz between 0.4 and 0.5 V.

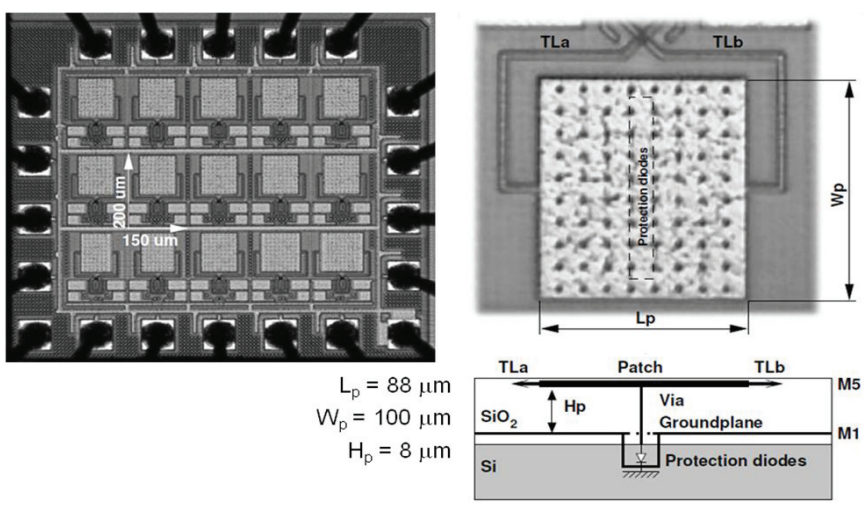

Fig. 2. (From [6]) Left side: 3x5-pixel FPA for the detection of 0.65-THz radiation. Top right side: one of the patches of the array. The transmission lines guiding the THz signals to the FETs are visible. Bottom right: Cross-section through a patch antenna.

We recently investigated FPAs fabricated with an improved NMOS foundry technology (gate length: 150 nm) [8]. They did not contain integrated amplifiers, because we were interested in measuring the responsivity and NEP values of bare transistors. The detectors were designed for the frequency range 550 – 600 GHz. They again had patch

antennas (impedance: 300 Ω at resonance, FWHM bandwidth: 8 % of center frequency). At set of transistors was measured at 572.4 GHz, slightly off from the peak of the respective antenna resonance. At the maximum of the responsivity curve, at a gate voltage of 0.39 V, we determined the responsivity to be 800 V/W, averaged over 15 detectors on different chips, while the value was 300 V/W at a gate voltage of 0.7 V, the minimal-NEP operation point. There, the average NEP value was found to be 51 pW/√Hz. Fig. 3 displays the NEP as a function of gate voltage for 5 different transistors on different chips, but from the same process run. One can clearly see a variation of the performance, but it is not drastic. Notably, not a single transistor of all measured by us had failed.

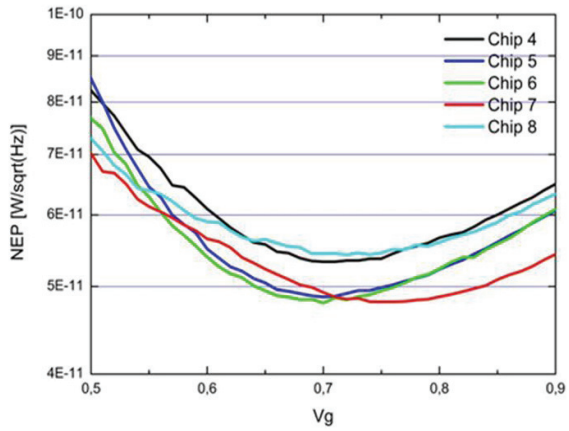

Fig. 3. NEP as a function of gate voltage for a set of CMOS FETs fabricated in 150-nm technology.

With other sets of transistors, having a slightly different design frequency, we could measure at resonance (576 and 595 GHz). The responsivity peaked at 900 V/W. At the minimal-NEP operation point, the average NEP value was 43 pW/√Hz, and the responsivity 340 V/W. When compared with the NEP data of other commercially available THz detectors operating at room temperature [5], such as Golay cells (140 pW/√Hz), pyroelectric sensors (800 pW/√Hz) or microbolometer arrays (320 pW/√Hz), the NEP value of 43 pW/√Hz of our transistors is found to be very competitive.

We point out that all numbers given are optical NEP values. For our transistors, we calculate that the minimum electrical NEP amounts to 9 pW/√Hz, and the maximum unamplified electrical responsivity to 1.7 kV/W [7].

3. Heterodyne Detection

A significant potential for improved sensitivity of the CMOS FET detectors lies in their high-frequency capability, which readily permits operation in heterodyne mode. In this respect, the transistors can be employed in a similar way as Schottky diodes. We demonstrated heterodyne imaging with the 0.65-THz detectors described above (see Fig. 2) [9]. As local oscillator, we employed a second radiation source which was phase-locked to the first one, but had a frequency-offset of 10 MHz. The first source illuminated the object. The radiation of both emitters was then overlaid on a beam combiner, guided to the detectors, and distributed over the entire FPA. Each FET detector received only 2 μW of local-oscillator power (compare with power of the order of 1 mW for optimal performance). This was sufficient, however, to improve the dynamic range by 29 dB. The NEP was estimated to be 8 fW/Hz.

A visual impression of the improvement can be obtained from the imaging data shown in Fig. 4. It presents data of transmission measurements through a paper envelope containing a dextrose tablet. In power-detection mode (radiation from local-oscillator source blocked), the received signal is weak, and details such as the central groove of the tablet are nearly invisible. In heterodyne mode, the considerably higher contrast permits to clearly identify the groove. The writing on the tablet becomes discernible, although the image shown here does not allow to discern the characters.

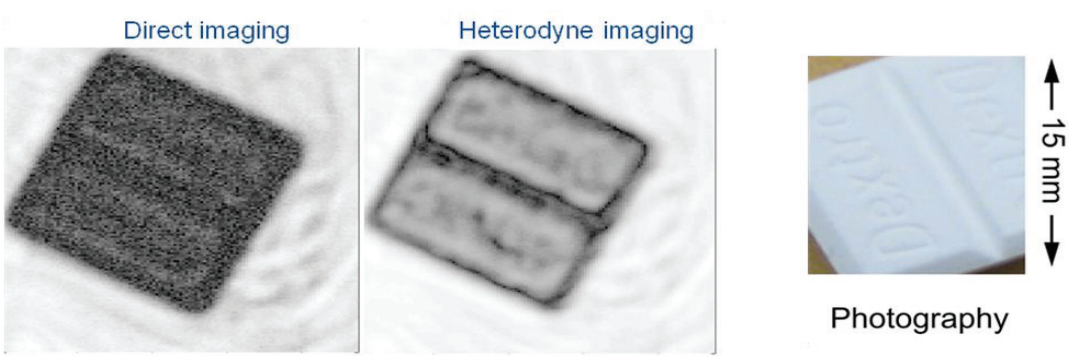

Fig. 4. THz image taken through a dextrose tablet (see photograph on the right side) hidden in a letter envelope. Left side: Detection of transmitted power; middle: heterodyne measurement.

Performing heterodyne measurements in the way described here is not very practical because it requires a second, costly THz radiation source. An obvious alternative is subharmonic mixing. Simulations show a good efficiency of subharmonic mixing with FETs, and detection of radiation at 650 GHz, employing a local oscillator signal at 162 GHz, was recently demonstrated with an integrated circuit implemented in 0.13-μm SiGe:C BiCMOS technology [10].

4. Conclusion

The detection of terahertz radiation by distributed resistive mixing in Si MOSFETs is shown to be of high practical interest for the development of a viable, cost-effective terahertz imaging technology. We demonstrate that a very good optical noise-equivalent power of 43 pW/√Hz is achieved with transistors which are fabricated with a low-cost commercial 0.15-μm CMOS technology. Si FETs are clearly capable of multi-pixel parallel detection, which is highly interesting for imaging and data-communication applications. Heterodyne detection can improve the sensitivity even further. One of the challenges for the success of a MOSFET-based imaging technology is the large wavelength of THz radiation (1 THz corresponding to λ_{Vacuum} = 300 μm). Diffraction aspects suggest that a focal-plane array with a large number of monolithically integrated pixels is more practical at high frequencies (0.5 THz and above) and in conjunction with large numerical-aperture optics, while its usefulness may be questionable at frequencies approaching 100 GHz.

6. Acknowledgments

Funding by BMBF, WI Bank Hessen, and Oerlikon AG is gratefully acknowledged.

7. References

1. M. Dyakonov and M. Shur, “Detection, mixing, and frequency multiplication of terahertz radiation by two-dimensional electronic fluid”, IEEE Trans. Electron Devices **43** (3), 1996, pp. 380-387.

2. W. Knap, M. Dyakonov, D. Coquillat, F. Teppe, N. Dyakonova, J. Łusakowski, K. Karpierz, M. Sakowicz, G. Valusis, D. Seliuta, I. Kasalynas, A. El Fatimy, Y.M. Meziani, and T. Otsuji, “Field effect transistors for terahertz detection: Physics and first imaging applications”, J. Infrared Milli. Terahz. Waves **30**, 2009, pp. 1319–1337.

3. R. Tauk, F. Teppe, S. Boubanga, D. Coquillat, W. Knap, Y.M. Meziani, C. Gallon, F. Boeuf, T. Skotnicki, C. Fenouillet-Beranger, D.K. Maude, S. Rumyantsev, and M.S. Shur, “Plasma wave detection of terahertz radiation by silicon field effects transistors: Responsivity and noise equivalent power”, Appl. Phys. Lett. **89** (25), 2006, 253511.

4. A. Lisauskas, W. von Spiegel, S. Boubanga-Tombet, A. El-Fatimy, D. Coquillat, F. Teppe, N. Dyakonova, W. Knap, and H.G. Roskos, “Terahertz imaging with GaAs field-effect transistors”, Electron. Lett. **44** (6), 2008, pp. 408-409.

5. A. Lisauskas, U. Pfeiffer, E. Öjefors, P. Haring Bolìvar, D. Glaab, and H.G. Roskos, “Rational design of high-responsivity detectors of terahertz radiation based on distributed self-mixing in silicon field-effect transistors”, J. Appl. Phys. **105** (11), 2009, 114511.

6. E. Öjefors, U. Pfeiffer, A. Lisauskas, and H. G. Roskos, “A 0.65 THz focal-plane array in a quarter-micron CMOS process technology”, IEEE J. Solid-State Circuits **44** (7), 2009, 1968-1976.

7. A. Lisauskas, D. Glaab, H.G. Roskos, E. Öjefors, and U. Pfeiffer, “Terahertz imaging with Si MOSFET focal-plane arrays”, Proc. SPIE. **7215**, 2009, 72150.

8. S. Boppel, A. Lisauskas, V. Krozer, and H.G. Roskos, “Performance and performance variations of sub-1-THz detectors fabricated with a 0.15-μm CMOS foundry process”, submitted to Electron. Lett.

9. D. Glaab, S. Boppel, A. Lisauskas, U. Pfieffer, E. Öjefors, and H.G. Roskos, “Terahertz heterodyne detection with silicon field-effect transistors”, Appl. Phys. Lett. **96** (4), 2010, 042106.

10. E. Öjefors and U.R. Pfeiffer, “A 650 GHz receiver front-end for terahertz imaging arrays”, IEEE Internat. Solid-State Circuits Conference ISSCC, 2010, pp. 430-432.