The Convergence of Broadcasting and Heterogeneous Wireless Communications over Fiber Network – An Experiment of Field Trial -

Takeshi Higashino[1], Katsutoshi Tsukamoto[1], Shozo Komaki[1], Kazuo Kumamoto[2], Koji Yasukawa[2] and Keizo Ingaki[3]

[1]Division of Electric and Electronic and Information Engineering, Graduate school of Engieering, Osaka University, 2—1 Yamadaoka, Suita, Osaka, 565-0871, Japan. Email: higa@comme.ng.osaka-u.ac.jp

[2]Faculty of Engineering Osaka Institute of Technology, 5-16-1, Omiya, Osaka-city, Osaka, 535-8585, Japan. Email: kumamoto@elc.oit.ac.jp

[3]National Institute of Information and Communication Technology, 4-2-1, Nukui-Kitamachi, Koganei, Tokyo, 184-8795, Japan. Email: k-inagaki@nict.go.jp

Abstract

This paper describes on application of Radio-on-Fiber, for the digital divide solution by utilizing CATV optical fiber network. We have been demonstrated RoF repeater system for heterogeneous wireless infrastructure by using in-door experiment, however field trial is required. Now, the radiation inspection have been done as an experiment bureau in the mountainous area at the Nosegawa village in Nara prefecture, Japan aiming evaluating the correspondence with the link budget design, and clarifying wireless coverage of the proposed system. In this paper, the SCM RoF transmission of multiple radio services and result of the field trial is reported.

1. Introduction

As for nationwide progressing the terrestrial digital broadcasting and high-speed Internet such as the Fiber-To-The-Home (FTTH) with the optical fiber network, etc. the equipments of the broadcasting and communication infrastructure are rapidly developed in recent years, and various communication services like IP broadcasting, one segment broadcasting, and a high-speed mobile communication, etc. are supplied in the urban area in Japan. On the other hand, the mountainous area and isolated islands, where the equipments of the broadcasting and communication infrastructure are poor. The rural area have a serious problem so called "digital divide problem". The strategy of our country treats to cancel these digital divides. However, it is a current state that additional construction of infrastructure equipments are not promoted for rural regions and the isolated island because there is no hope for earnings versus cost-performance. Additionally, a various kind of wireless services appeared in a present wireless Internet access, such as 3.) G cellular and WiMAX, and maintaining the infrastructure of each service (cable and base station installation) is attended to be difficult with respect of cost. It is preferable for such a digital divide region to install the general-purpose network infrastructure that doesn't depend on the waveform formats of radio service. It is thought that "Radio on Fiber (In short, RoF)" technology that transferred radio service to the remote site by intensity modulated optical signal [1]-[4]. But, the optical fiber constructed beforehand is needed. Since the technology-shift to the terrestrial digital broadcasting from conventional analog system will be conducted on July 2011, the optical fiber network is rapidly constructed by CATV operators in order to provide pass-through signal to residents living in the mountainous region, especially in Japan.

In this R&D project, it aims at the digital divide cancellation by executing the field trial of simultaneous transmission heterogeneous radio signals such as the terrestrial digital broadcasting, WiMAX, and WLAN by using the optical fiber utilizing CATV access network. In this paper, we propose the radio repeater system which can make a convergence of the heterogeneous radio signals that broadcasting and the communication service in the physical layer, and report on the result of fundamental field trial by the radio radiation in the mountainous area at the Nosegawa village in Nara prefecture near the Koyasan (a world heritage). In the RoF network, RF signals modulates the optical carrier intensity and it is detected by the use of photodetector. At the output of the RoF link, RF signals are radiated from the remote antenna that is quite limited by the radio regulations, such as spectrum mask, spurious power and adjacent channel leakage power ratio (ACLR). Transmitting RF signals are deteriorated by the nonlinearity of the RoF link and following RF amplifier. Nonlinear distortion is especially related to the spectrum mask and ACLR regulation, and it is generally estimated by the two-tone test. Therefore, the nonlinear distortion estimation is taken as an important issue in the subcarrier multiplexing (SCM) system and to transmit multicarrier RF signal, because it increases by product of carrier number. Most of recent radio frequency (RF) signals in wireless service are employing multicarrier modulation whose subcarriers are densely located in frequency domain, such as orthogonal frequency division multiplexing (OFDM). This paper provides analysis method of intermodulation distortion of multicarrier RF signals including ISDB-T[5], IEEE802.11g[6,7] and IEEE802.16e-2005[8] over intensity modulation / direct detection (IM/DD) RoF link. Experimental evaluation is also presented in terms of the error vector magnitude (EVM).

978-1-4244-6051-9/11/$26.00 ©2011 IEEE

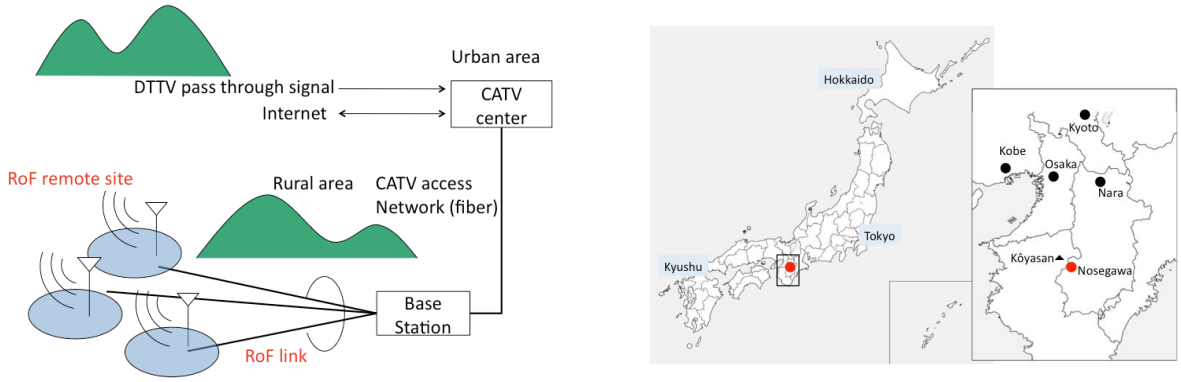

(a) (b)

Figure 1: (a) RoF repeater for rural area, (b) Target location in Japan

2. Radio on Fiber Network

Figure 2 shows the configuration of the experiment system. In the experiment, three points are connected through RoF link as explained 2.1. In the following, configurations of each point are explained in detail.

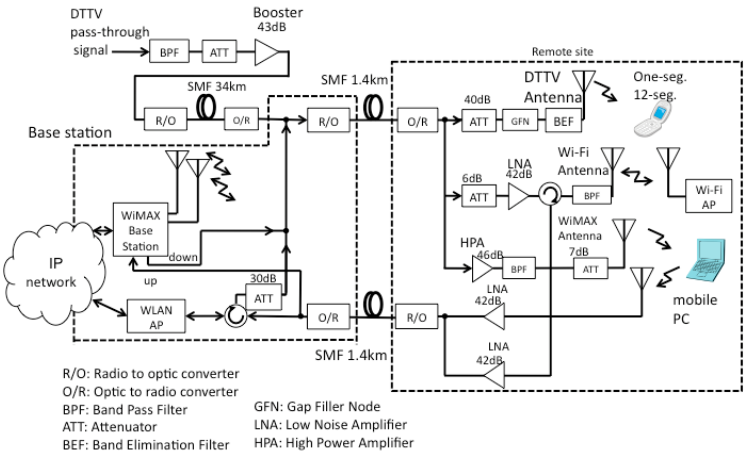

	DTTV	WiFi	WiMAX
Frequency [MHz]	473-581	2412-2472	2578
Transmission power [dBm/ch]	10	21.7	22.3
Bandwidth [MHz/ch]	5.8	22	9.9
# of channel	7	13	1
# of OFDM subcarrier/ch	5617	52	1024
Antenna type	Ring	Yagi	Corner Reflector
Antenna gain [dBi]	7.2	14	16.9
Antenna height [m]	6.68	5.2	6.55

Figure 2: Block diagram, and specification

Figure 2 shows a block diagram and the specifications. The pass-through signal of CATV system includes analog broadcasting signals, then they are input to the RoF transmitter module. In this experiment, the input power of the ISDB-T is about -60dBm per channel. Since the RoF transmitter module limits up to 0dBm RF input, it is amplified with the CATV booster (gain: 40dB), and the band pass filter (470~770MHz) is used to eliminate undesired TV channel.

The optical fiber length from Nishiyoshino to Nosegawa village is about 34km, and the transmission loss of optical fiber is about 9dB. Since the RoF receiver module has automatic gain control function, the loss of the optical fiber is compensated, and the electrical gain between the RoF transceiver is set to 0dB. The configuration of the Nosegawa village public office is a block under the left of Figure 2. At the place, the ISDB-T signal transmitted from Nishiyoshino is transferred to the remote site again by using subcarrier multiplexed with WiMAX and WLAN signals. The signal source of WiMAX and WLAN are the base station and access point that are set up in the public office also. Two main output ports of the WiMAX base station are transmitted directly to the sector antenna set up in the public office. On the other hand, two monitor connectors of the base station (40dB attenuation from the main output) are used for the RoF input source. Since RoF link is established as single direction, one connector is only used for up-link and another connector is used for down-link. Thus, transmission mode of WiMAX BS is set to MATRIX-A MIMO. RF connector of WLAN access point also connect with RoF down-link and up-link as same as WiMAX after separation by the circulator. In addition, each signal power is adjusted so that total electric power to be 0dBm. The configuration of the remote site is a block in the lower right of Figure 2. In the remote site, three services are separated, amplified and appropriate filtering to obtain enough propagation distance and to satisfy transmission spectrum mask. The re-radiation of the terrestrial digital broadcasting uses gap filler node (GFN) developed for radio dead zone. GFN is composed by the amplifier and the channel processor, and it can perform the waveform shaping and automatic power control to 10mW per channel. The down-link of the WiMAX signal amplifies to 200mW output with the power amplifier, and removes an unnecessary radiation with the band pass filter. On the other hand, up-link of the WiMAX, received signal

is amplified with LNA and transmitted through RoF. WLAN also has suppressed an unnecessary radiation and has controlled signal power with the band pass filter and amplifier as well as WiMAX.

3. Link Design and Radio Reguration

To optimize the received carrier to noise and distortion power ratio (CNDR), level diagram is introduced. Since the output noise of the O/R at the electrical domain is composed of the thermal noise, relative intensity noise (RIN) of the optical source, and shot noise, and inter-modulation distortion. Moreover, following RF amplifier generates the composite components of inter-modulation distortions and additional noise. From the level diagram, not only wireless coverage, but also dominant factor of the received CNDR can be found.

Figure 3 show the EVM, ACLR, spectrum mask measurement results. The required ACLRs are -40dB and -20dB over 9MHz when the frequency spacing is 40MHz and 20MHz, respectively. The spectrum mask is higher requirement than the ACLR. The EVM requirement of 64QAM signal is -25dB, the highest requirement is found to the spectrum mask, which can pass when the input power is more than -15dBm. Since the 3-rd order inter-modulation distortion is increased by a factor of 3, spectrum mask test will be failed as a high input level. The input dynamic range of more than 25dB is achieved. Minimum sensitivity of WiFi modulation scheme is from -85dBm to -68dBm of BPSK and 64QAM, respectively.

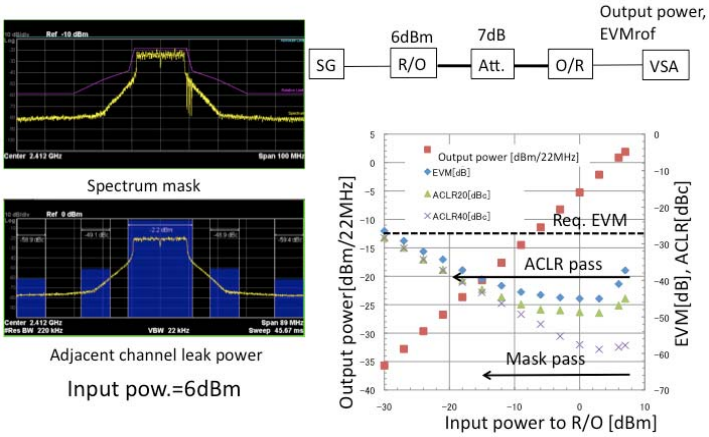

Figure 3: Inspection for Downlink WiFi signal, spectrum mask, adjacent channel leak power ratio, error vector magnitude.

4. Field Trial

Figure 4 shows the contour of the field site and photos. The altitude of the site is about 900m. The length of RoF is about 1.4km. The Base station and remote site are located at south and north part, respectively. Measurement interval is 15m along the road. At the base station, only WiMAX signal is radiated, but three services are radiated at the remote site. The difference of altitude between base station and remote site is 90m, then overlapped coverage could not be found in this field.

Figure 5 shows the Throughput performance of WiMAX up/down link. Stable performance is obtained for the north-east area compared with south area, because transmitting antenna of WiMAX system have sharp directivity to north area. However, the difference altitude prevents the propagation of WiMAX radio signals then wireless coverage is limited up to about 220m from the transmission point. In the coverage, throughput performance for downlink of 14Mbps is obtained.

5. Conclusion

This paper describes on the convergence of broadcasting and wireless communication utilizing CATV optical fiber network. To rapidly construct a heterogeneous wireless communication and broadcasting infrastructure, the RoF technology is effectively plays an important role. However, there is a problem to satisfy the radio regulations of all kind of radio signals transferred in RoF networks. In this experiment

6. Acknowledgments

A R&D program is executed as a collaborative work of Osaka Institute of Technology, Osaka University and NICT supported by Strategic Information and Communication R&D Promotion Program (SCOPE) conducted by the Ministry of Internal Affairs and Communication (MIC) of Japan.

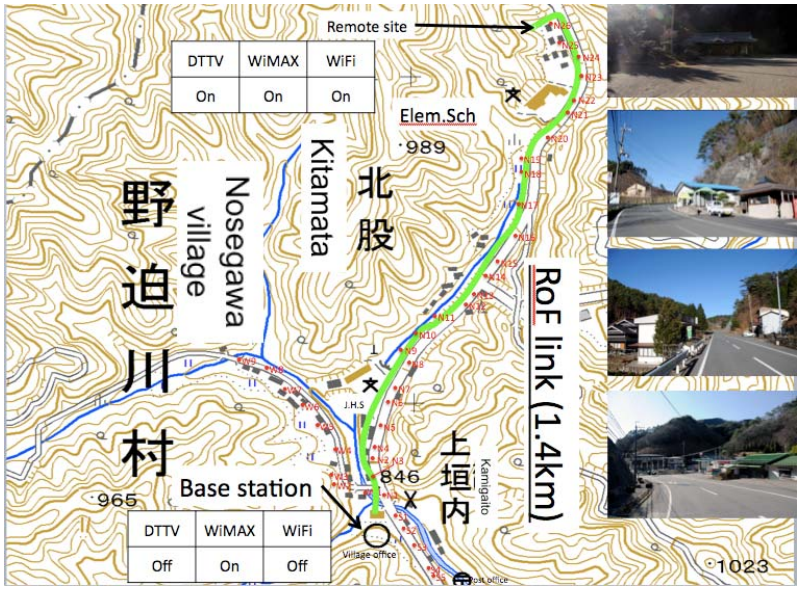

Figure 4: Contour of field site and photos

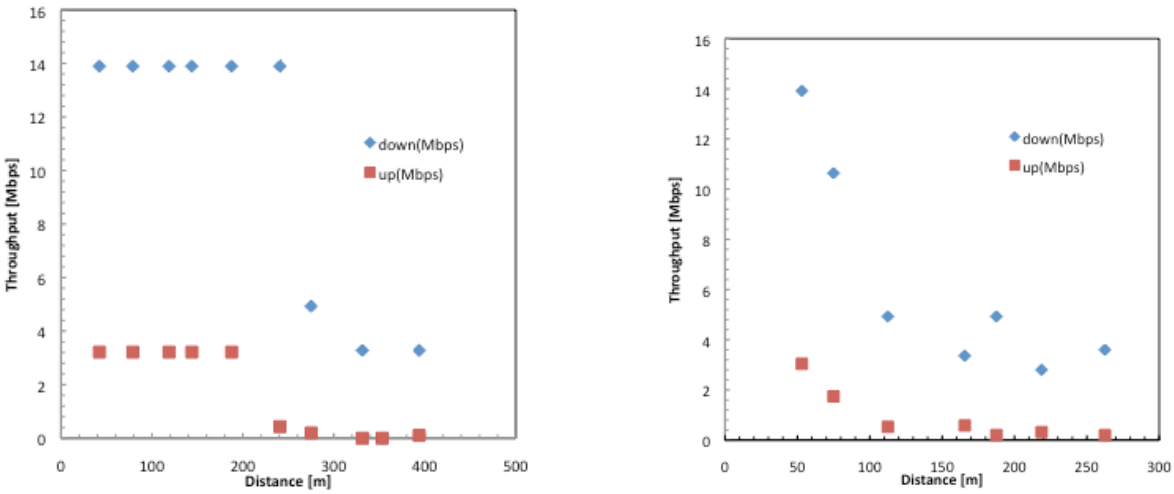

(a) North-east direction (b) South direction

Figure 5: Throughput performance of WiMAX system

7. References

1. K. Tsukamoto, H. Onodera, K. Kyung-Hwan, T. Nakamura, T. Higashino, Y. Aburakawa, S. Komaki, K. Wakamori, K. Takahashi, T. Suzuki, K. Kazaura, A.M. Shah, K. Omae, M. Matsumoto, T.Satou, "Link design of radio on free space optic system for heterogeneous wireless services", Technical dig. Of MWP'08, vol. 1, pp.232-5 (2008).
2. K. Uegaki, K. Kumamoto, K. Yasukawa, K. Inagaki, T. Higashino, K. Tsukamoto, and S. Komaki, "A novel nonlinear distortion suppression method in RoF systems using optical filter", Technical dig. of MWP'07, vol. 1, pp.33-6 (2007).
3. T. Higashino, K. Tsukamoto, S. Komaki, K. Kazaura, K. Wakamori, M. Matsumoto, T.Satou, "A demonstrative link design of ROFSO and its optimum performance - indoor short range experiment and a new model of optical scintillation" International Telecommunication Union. Proceedings of the 2009 ITU-T Kaleidoscope Academic Conference: Innovations for Digital Inclusions, p 7 (2009)
4. K. Kumamoto, K. Yasukawa, K. Inagaki, T. Higashino, K. Tsukamoto, and S. Komaki, "Convergence of broadcasting and communication utilizing CATV network", Proc. of AP-RASC'10, vol. DC-2-3(2010)
5. "Transmission System for Digital Terrestrial Television Broadcasting", ARIB STD-B31.
6. "Broadband mobile access communication system (CSMA)", ARIB STD-T77.
7. "Second generation low power data communication system/wireless LAN system", ARIB STD-T66.
8. "OFDMA Broadband Mobile Wireless Access System", ARIB STD-T94.