Combined Signal Processing in Information-Measuring Integrated Systems

Alexander B. Shmelev

Radiotechnical Institute by Academician A.L.Mints, 10, bld.1, 8 Marta st., Moscow, 127083, Russia
abshmelev@yahoo.com

Abstract

Optimal joint processing problem in information-measuring systems including several receivers is considered. Optimization purpose consists in minimization of common information parameter estimation error at the expense of combined processing of signals embedded in Gaussian noise. The consideration presented is based on Markovian approach developed in respect to assigned problem for the case of linear a priori stochastic equations generating information parameters under estimation. The integrated system's general structure synthesized includes units for innovation process formation at every receiver. These processes are summed with the weights proportional to signal/noise ratios. Required Bayesian estimates are composed via filtering of resulting innovation process in low-pass formation filters. Combined filtration of single information process transmitted via three different type channels in Gaussian noise background is studied in detail.

1. Introduction

One of modern tendencies towards enhancement characteristics of information-measuring facilities consists in their integration into complexes with combined signal processing. Optimization of such joint processing seems to be important problem. Markovian theory of signal processing [1], being generalized in appropriate manner [2], provides powerful tool for this problem investigation. In this paper further development of results obtained earlier is presented. For the sake of detailed investigation and physical interpretation of synthesized combined processing structure schemes we restrict ourselves to the case of linear formation filter which generates useful information parameters under estimation $\xi = (\xi_1, \ldots, \xi_L)$ depending, in general, on time *t*.

2. The Markovian approach equations

Let aforementioned information parameters be submitted to a priori stochastic linear differential equations

$$\frac{d\xi_l}{dt} + \sum_{i=1}^{L} \gamma_{li}\xi_i = \chi_l(t), \qquad l=1,2,\ldots,L \tag{1}$$

where $\chi_l(t)$ are Gaussian external forces with covariance matrix $\overline{\chi_i(t)\chi_j(t')} = \kappa_{ij}\delta(t-t')$ and zero mean values. A priori probability density function (PDF) $V(t,\xi)$ follows partial derivatives equation [2]

$$\frac{\partial V(t,\xi)}{\partial t} = \sum_{i=1}^{L} \frac{\partial}{\partial \xi_i}\left[V(t,\xi) \sum_{j=1}^{L} \gamma_{ij}\xi_j \right] + \frac{1}{2}\sum_{i,j=1}^{L} \kappa_{ij} \frac{\partial^2 V(t,\xi)}{\partial \xi_i \partial \xi_j}. \tag{2}$$

We need to estimate parameters $\xi = (\xi_1, \ldots, \xi_L)$ via observation at *M* receivers signal and noise mixtures

$$y_m(t) = S_m(t,\xi) + n_m(t), \qquad m=1,\ldots,M, \tag{3}$$

where signals $S_m(t,\xi)$ have deterministic form and depend on the range of information parameters ξ; $n_m(t)$ – Gaussian noises having correlation matrix $\overline{n_m(t)n_n(t')} = N_{mn}(t)\delta(t-t')$ and zero mean values. Every signal S_m can include the whole range of parameters under estimation or some part of them.

The most general characteristic after observation is a posteriori probability density function (PDF) $W(t,\xi)$, which is the probability that parameters have values ξ at time point *t* under the condition that during time interval (0,*t*) realizations (3) of signal and noise mixtures were observed at all receivers. Equation describing evolution of $W(t,\xi)$ in respect to problem under consideration takes the form

978-1-4244-5118-0/11/$26.00 ©2011 IEEE

$$\frac{\partial W(t,\xi)}{\partial t} = \mathbf{L}W(t,\xi) + W(t,\xi)\left[F(t,\xi) - \left\langle F(t,\xi)\right\rangle\right], \tag{4}$$

$$F(t,\xi) = \sum_{k,m=1}^{M} Q_{km}(t) S_k(t,\xi)\left[y_m(t) - 1/2 \cdot S_m(t,\xi)\right], \tag{5}$$

where **L** is a priori linear operator in the right hand side of (2). Matrix Q_{km} is inverse correlation matrix of observation noises, it obeys set of equations $\sum_{k=1}^{M} N_{mk} Q_{kn} = \delta_{mn}$. Averaging over a posteriori PDF is indicated by corner brackets. If observation noises n_m are stationary and mutually independent, then (5) is simplified to

$$F(t,\xi) = \sum_{m=1}^{M} \frac{1}{N_m} S_m(t,\xi) \cdot \left[y_m(t) - \frac{1}{2} S_m(t,\xi)\right]. \tag{6}$$

The next step, usual in Markovian approach, is transition to Gaussian approximation equations for the first and second order cumulants of a posteriori PDF. Standard technique [1] leads to these equations

$$\frac{d\hat{\xi}_l(t)}{dt} + \sum_{i=1}^{L} \gamma_{li} \hat{\xi}_i = \sum_{i=1}^{L} K_{il} \sum_{m=1}^{M} \frac{1}{N_m} \frac{\partial S_m(t,\hat{\xi})}{\partial \xi_i}\left[y_m(t) - S_m(t,\hat{\xi})\right], \tag{7}$$

$$\frac{dK_{ij}}{dt} + \sum_{l=1}^{L}\left(\gamma_{il} K_{lj} + \gamma_{jl} K_{li}\right) = \kappa_{ij} + \sum_{l,p=1}^{L} K_{li} K_{pj} \sum_{m=1}^{M} \frac{1}{N_m}\left\{\frac{\partial^2 S_m}{\partial \xi_l \partial \xi_p}\left[y_m - S_m\right] - \frac{\partial S_m}{\partial \xi_l}\frac{\partial S_m}{\partial \xi_p}\right\}. \tag{8}$$

They describe structure of quasi-optimal combined signal processing in information-measuring complex which integrates several receivers. Because of dependence S_m on $\hat{\xi}$ equations (7) and (8) become interdependent and the structure synthesized seems to be very complicated in general. The purpose of the next chapter is in it's simplification via detailed analysis of obtained equations.

3. Structure of quasi-optimal combined signal processing

Let us lay special emphasis on innovation processes $\nu_m(t) = y_m(t) - S_m(t,\hat{\xi})$ presented in (7) and (8). Their significance in detection and estimation problems was firstly studied by T. Kailath [3]. Being statistically equivalent to observation noises $n_m(t)$ they are similar to external random forces. Rewriting (7) in the form

$$\frac{d\hat{\xi}_l(t)}{dt} + \sum_{i=1}^{L} \gamma_{li} \hat{\xi}_i = \sum_{m=1}^{M} G_{lm}(t,\hat{\xi})\left[y_m(t) - S_m(t,\hat{\xi})\right], \tag{9}$$

where $G_{lm}(t,\hat{\xi}) = \frac{1}{N_m}\sum_{i=1}^{L} K_{il} \frac{\partial S_m(t,\hat{\xi})}{\partial \xi_i}$, we see that ν_m give rise to estimates $\hat{\xi}_l$ formation. On the contrary, in (8) they lead to fluctuations of the second order cumulants K_{ij} around their regular values. Averaging (8) over time leads to simplified equations for these values

$$\frac{d\widetilde{K}_{ij}}{dt} + \sum_{l=1}^{L}\left(\gamma_{il}\widetilde{K}_{lj} + \gamma_{jl}\widetilde{K}_{li}\right) = \kappa_{ij} - \sum_{l,p=1}^{L} \alpha_{lp} \widetilde{K}_{li} \widetilde{K}_{pj}\ , \tag{10}$$

where $\alpha_{lp} = \sum_{m=1}^{M} \frac{1}{N_m} \widetilde{\frac{\partial S_m}{\partial \xi_l}\frac{\partial S_m}{\partial \xi_p}}$ and upper tilda denotes temporal averaging which is decoupled in some products because of supposed smallness of cumulant's temporal fluctuations in comparison with their regular values. This assumption holds true when resulting signal/noise ratio in integrated system is rather great. This condition is typical for Gaussian approximation technique validity. Hereafter we'll omit tilda over K_{ij} for the sake of brevity.

Coefficients α_{lp} depend generally on energetic characteristics of signals and noises, they don't depend on estimates $\hat{\xi}$ themselves. Therefore equation (10) can be considered independently on (9). Replacement of K_{ij} in (9) by their averaged values leads to simplified structure of combined signal processing. Basically this structure

includes generation of innovation processes ν_m which being multiplied by functions G_{lm} and summed over all receivers create random input signals for linear formation filters described by left hand side of (9). Output signals coincide with required estimates. Right hand side (9) can be represented for non-energetic parameters $\left(\partial\widetilde{S_m^2}/\partial\xi_i = 0\right)$ in more simple form $\sum_{m=1}^{M} G_{lm}\left(t,\hat{\xi}\right) y_m\left(t\right)$. This leads to appearance phase-lock loops (PLL) instead of innovation process generation blocks in signal processing structure.

4. Combined processing example

Let $\xi(t)$ be the solely information parameter – Gauss-Markov process described a priori by simplest stochastic differential equation

$$\frac{d\xi}{dt} + \gamma\xi = \chi(t), \quad \overline{\chi(t)\chi(t')} = \kappa\delta(t-t'). \tag{11}$$

This information parameter is transmitted via three types communication channels: M_1 cable channels (CC), M_2 radio channels with amplitude modulation (AM), M_3 radio channels with phase modulation (PM). General number of channels (as well as receivers) is equal to $M = M_1 + M_2 + M_3$. Signal and noise observation mixtures at these receivers are described by expressions

CC
$$y_m\left(t\right) = h_m\xi\left(t\right) + n_m\left(t\right), \quad m = 1,\ldots,M_1, \tag{12}$$

AM
$$y_m\left(t\right) = C_m\left[1 + g_m\xi\left(t\right)\right]\cos\omega_m t + n_m\left(t\right), \quad m = M_1+1,\ldots,M_1+M_2, \tag{13}$$

PM
$$y_m\left(t\right) = A_m\cos\left[\omega_m t + b_m\xi\left(t\right)\right] + n_m\left(t\right), \quad m = M_1+M_2+1,\ldots,M_1+M_2+M_3, \tag{14}$$

where white Gaussian noises $n_m\left(t\right)$ are mutually independent and have correlation matrix

$$\overline{n_m\left(t\right)n_k\left(t'\right)} = N_m\delta_{km}\delta\left(t-t'\right), \quad k,m = 1,\ldots,M. \tag{15}$$

The problem consists in synthesis combined processing structure scheme for optimal filtering of information parameter $\xi(t)$ and calculation estimation error. Solution of this problem can be obtained on the basis of equations (9) and (10) which take the form

$$\frac{d\hat{\xi}}{dt} + \gamma\hat{\xi} = K\sum_{m=1}^{M_1}\frac{h_m}{N_m}\left(y_m - h_m\hat{\xi}\right) + K\sum_{m=M_1+1}^{M_1+M_2}\frac{C_m g_m}{N_m}\left[y_m\cos\omega_m t - \frac{C_m}{2}\left(1 + g_m\hat{\xi}\right)\right] - K\sum_{m=M_1+M_2+1}^{M_1+M_2+M_3}\frac{A_m b_m}{N_m}y_m\sin\left(\omega_m t + b_m\hat{\xi}\right),$$

where terms with double carrier frequencies are omitted because of proposed selectivity of processing system. Let's rewrite this equation in equivalent form

$$\frac{d\hat{\xi}}{dt} + \gamma_0\hat{\xi} = K\sum_{m=1}^{M_1}\frac{h_m}{N_m}y_m + K\sum_{m=M_1+1}^{M_1+M_2}\frac{C_m g_m}{N_m}\left(y_m\cos\omega_m t - \frac{C_m}{2}\right) - K\sum_{m=M_1+M_2+1}^{M_1+M_2+M_3}\frac{A_m b_m}{N_m}y_m\sin\left(\omega_m t + b_m\hat{\xi}\right), \tag{16}$$

where new response time of formation filter γ_0^{-1} is described by expression

$$\gamma_0 = \gamma + K\sum_{m=1}^{M_1}\frac{h_m^2}{N_m} + K\sum_{m=M_1+1}^{M_1+M_2}\frac{C_m^2 g_m^2}{2N_m}. \tag{17}$$

Second order cumulant K coincides with a posterior mean square estimation error σ_{ps}^2. Equation (10) for its calculation takes the form of Riccatti equation

$$\frac{dK}{dt} + 2\gamma K + \mu K^2 = \kappa, \tag{18}$$

where resultant signal/noise ratio μ equals to the sum of signal/noise ratios in all receivers because of system coherence

$$\mu = \sum_{m=1}^{M}\mu_m = \sum_{m=1}^{M_1}\frac{h_m^2}{N_m} + \sum_{m=M_1+1}^{M_1+M_2}\frac{C_m^2 g_m^2}{2N_m} + \sum_{m=M_1+M_2+1}^{M}\frac{A_m^2 b_m^2}{2N_m}. \tag{19}$$

In steady-state filtration regime, when $dK/dt = 0$, equation (18) becomes algebraic. This leads to simple solution

$$\frac{K}{\sigma_\xi^2} = \frac{\sigma_{ps}^2}{\sigma_\xi^2} = \frac{2}{1+\sqrt{1+2\alpha}}, \tag{20}$$

where $\sigma_\xi^2 = \kappa/2\gamma$ is a priori variance of information process $\xi(t)$ and $\alpha = \mu\sigma_\xi^2/\gamma$ – principal parameter proportional to resultant signal/noise ratio during correlation time γ^{-1} which specifies steady-state filtration performance.

The figure represents synthesized combined signal processing structure scheme. Here are shown 3 receivers of different type designated by indexes m_1 – CC, m_2 – AM, m_3 – PM.

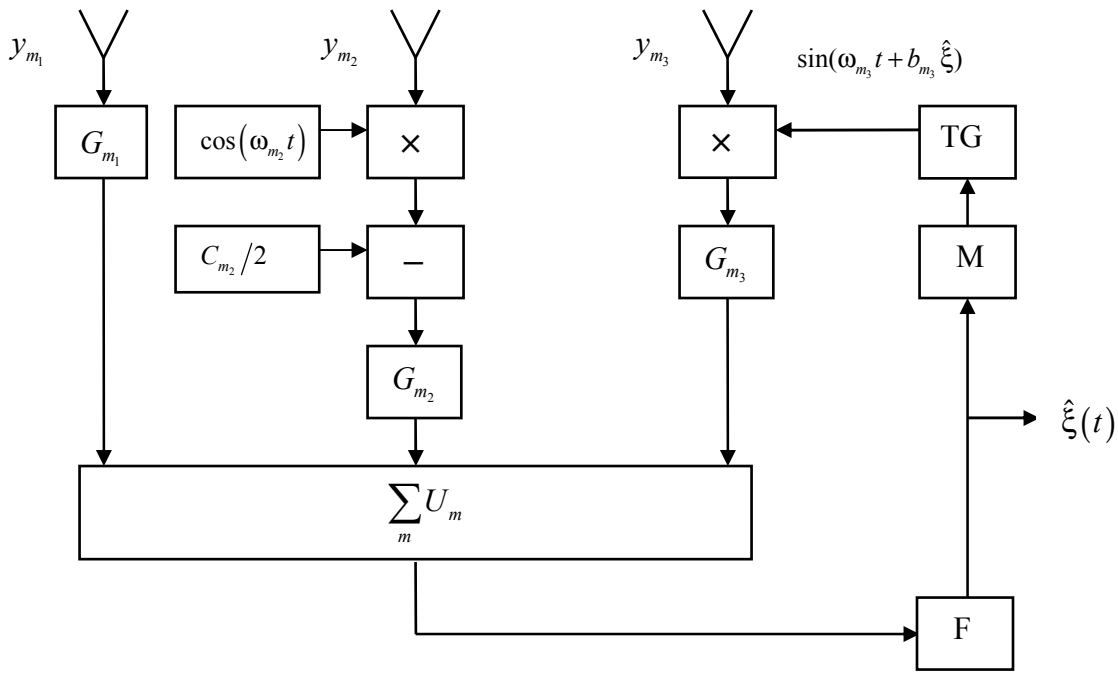

It should be noted that because of PM signals reception this structure scheme includes phase-lock loop (PLL) as a principal element. Designations on the scheme are the next: M – phase modulator; TG – tunable generator; × – multiplier; G_m – amplifiers having gains defined in (16); F – low-pass filter possessing the response time γ_0^{-1}.

5. Conclusion

Synthesis and analysis problem of optimal combined signal processing in information-measuring integrated systems including several receivers is considered on the Markovian approach basis. Efficiency of this approach is corroborated by generality of obtained equations and by results of particular problems solution.

6. References

1. A.B. Shmelev, *Principles of the Markovian theory of random fields non-linear processing*, Moscow, Moscow Institute of Physics and Technology Press, 1998 (in Russian).

2. A.B. Shmelev, "Markovian Approach to Optimal Information-Measuring Facilities Integration Problems," Proc. of the 2nd International Symposium on Radio Systems and Space Plasma, Sofia, Bulgaria, 2010, pp.45-48.

3. T. Kailath, "The innovations approach to detection and estimation theory," *Proc. IEEE,* **V.58**, N5, 1970, pp.680-695.