LTE and LTE-Advanced: Radio technology aspects for mobile communications

Nakamura, Takaharu

Advanced Platform Development Division, Mobile Phones Business Unit, FUJITSU LIMITED
1-1, Kamikodanaka 4-chome, Nakahara-ku, Kawasaki, 211-8588, Japan (Company Mail No./E2302)
n.takaharu@jp.fujitsu.com

Abstract

The paper presents history of radio communication technologies for mobile communications briefly followed by introduction of LTE (Long Term Evolution) or LTE-Advanced radio technologies. Activities in 3GPP (Third Generation Partnership Project) are also touched where latest radio communication standards are developed. Afterwards as examples of key radio technologies used in LTE or LTE-Advanced, its operating frequency bands and Carrier Aggregation (CA) feature are covered. Also several promising technologies are explained which will be an essential element in order to realize coming mobile phone terminals.

1. Introduction

For the last decade, it was a period where mobile communication technologies have evolved from its second generation digital systems to the third generation systems which provide variety of mobile communication services in the actual markets. It is no doubt that further improvement or evolution will take place in the next decade without a break. The users will see more convenient and sophisticated mobile devices which allow them to make an access to various services via ubiquitous environment. In this context, both LTE and LTE-Advanced are one of the most promising radio communication technologies for the mobile telecommunication market because of its higher spectrum efficiency, high speed data transfer or lower data transfer delay. They will provide variety of communication tools to the users.

In this paper, history of radio communication technologies for the mobile communication is briefly reviewed followed by introduction of LTE or LTE-Advanced. Activities in 3GPP (Third Generation Partnership Project) is also explained where the latest radio communication standards are developed. Additionally some key aspect in terms of radio communication technologies, such as frequency bands for LTE or LTE-Advanced, Carrier Aggregation technology applied in LTE-Advanced, future essential technologies considering mobile terminals configurations are covered.

2. Radio Access Technologies for Mobile communications

For the last decade, it was a period where mobile communication technologies had evolved from its second generation digital systems, such as GSM (Global System for Mobile Communications) or PDC (Personal Digital Cellular), to the third generation systems, i.e. W-CDMA (Wideband Code Division Multiple Access, which is also referred as UMTS (Universal Mobile Telecommunications System) etc. While the second generation systems mainly focused on voice only services using several ten kbps data rate, the latest third generation systems provide more than 10Mbps data services thanks for the higher order modulation technologies like 64 QAM (Quadrature Amplitude Modulation), or state of the art radio transmission scheme such as MIMO (Multi Input Multi Out put) in which multiple antenna transmission / reception are utilized (see Fig.-1). It is no doubt that further improvement or evolution will take place in the next decade without a break. The users of mobile phones will see more convenient and sophisticated mobile devices which allow them to access variety pieces of information in ubiquitous environment as shown in Fig.-2.

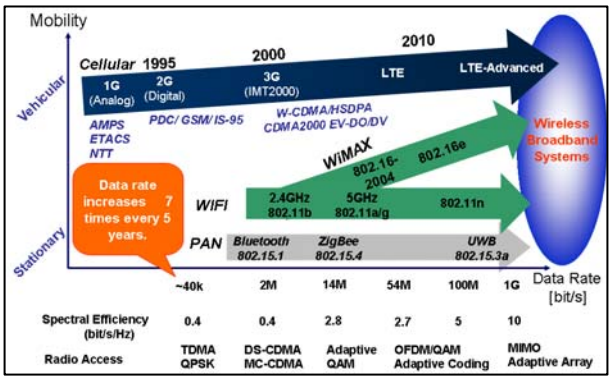

Fig.-1 Radio Access Technologies for Mobile communications

978-1-4244-6051-9/11/$26.00 ©2011 IEEE

In this context, both LTE and LTE-Advanced are one of the most promising radio communication technologies because of its higher spectrum efficiency, high speed data transfer or shorter data latency. Both LTE and LTE-Advanced are standardized in 3GPP. LTE is an evolution from UMTS which is widely deployed in all over the world. LTE-Advanced is a further enhanced system based on LTE and it would provide promising and attractive radio access scheme.

2. Evolution path from W-CDMA to LTE/LTE-Advanced

3GPP is a collaboration agreement that was established at the end of 1998 by telecommunications standards organizations in Europe, United States, China, Korea and Japan in order to develop a global standard for IMT 2000 (International Mobile Telecommunications 2000). The project provided a set of standards for UMTS in March 2000 applying W-CDMA [1] as a radio access technology. The first commercial service of UMTS was launched at 2001 in Japan and the system offers 384kbps packet service in down link.

Since then, a number of enhancements have been made ant the latest UMTS technology using HSPA (High Speed Packet Access) provides nearly 10Mbps downlink packet access service or more than 5Mbps in uplink service (See Table 1). The system has been deployed all over the world to date.

The first study phase of LTE was started in early 2005 and completed in 2006 [2]. In LTE, the same frequencies bands, which are allocated to UMTS, are applicable in order to allow gradual and practical evolution from UMTS to LTE. Various operation band widths of from 1.4MHz to 20MHz allow flexible deployment of the system which may fit either in narrower spectrum in VHF bands or wider frontier bands over 2GHz. To achieve high spectrum efficiency, OFDM (Orthogonal Frequency Division Multiplex) is applied for downlink (Base station to Mobile terminal direction). The spectrum efficiency of LTE in downlink should be 3 to 4 times higher than that in HSDPA (High Speed Downlink Packet Access). As for uplink (Mobile to Base Station access), SC FDMA (Single Carrier Frequency Division Multiple Access) [3] is applied that attains higher spectrum efficiency with output signal of lower peak to average power ratio (PAPR) It means SC FDMA would require relaxed linearity performance to power amplifiers in mobile terminals and make them reasonable size or to have lower power consumption. In order to reduce transmission delay, the length of the radio frame is set at 0.5ms which is a quarter size of the one in HSPA.

In ITU R, IMT Advanced has been investigated which system should provide higher peak data rate up to 1Gbps with lower mobility or 100Mbps peak data rate with higher mobility [4]. 3GPP started the study for LTE-Advanced as a candidate for IMT-Advanced in 2008 and first version of its core requirements have been fixed this year. LTE-Advanced complies with all the requirements required as IMT-Advanced and it will become one of a Set of Radio Interface Technologies (SRIT) for IMT-Advanced. To cope with both wider bandwidth services and flexible utilization of the allocated spectrum in each countries or regions, LTE-Advanced applies Carrier Aggregation technology. Each aggregated component carrier is corresponds to a spectrum in each frequency band for UMTS or LTE.

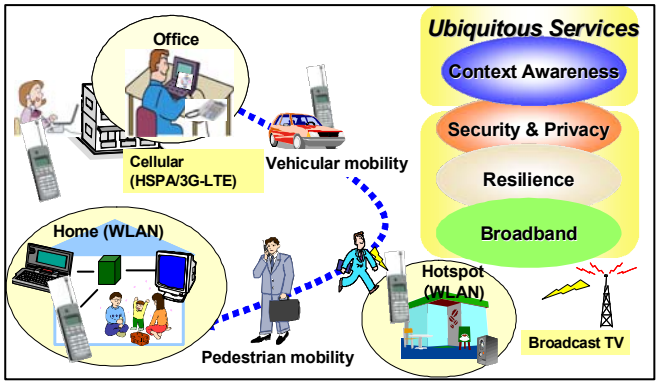

Fig.-2 Multi-Purpose Mobile Gear

Table.-1 Radio Access Technologies in 3GPP

		W-CDMA	HSPA	LTE	LTE-Advanced
Radio access technology	Down link	CDMA	CDMA/TDM	OFDMA	OFDM
	Up link	CDMA	CDMA/TDMA	SC-FDMA	N-times DFT-Spread OFDM
Modulation		HSPK/QPSK	HPSK, QPSK, 16QAM	QPSK, 16QAM, 64QAM	QPSK, 16QAM, 64QAM
Data Rate (max.)	Down link	384kbps	14.4Mbps	300Mbps	1Gbps
	Up link	64kbps	5.7Mbps	50Mbps	50Mbps
Operation bandwidth		5MHz	5MHz	1.4/3/5/10/15 /20MHz	Aggregated component carriers of LTE (~100MHz)
Frequency band		800MHz, 900MHz, 1.5GHz, 1.7GHz, 1.8GHz, 1.9GHz, 2.1GHz, 2.6GHz			

2. Operating frequency bands for LTE and LTE-Advanced

For UMTS and LTE, more than 30 frequency bands have been developed in 3GPP as shown in Table-3 (for FDD) and Table -4 (for TDD). In addition to these, the following radio frequency bands in the range from 400MHz to

4GHz are identified as additional potential bands for IMT in ITU-R, where IMT is a generic term referring to IMT-2000 and IMT-Advanced.

- 3.4-3.8 GHz band
- 3.4-3.6GHz as well as 3.6-4.2GHz
- 3.4-3.6 GHz band
- 450−470 MHz band
- 698−862 MHz band
- 790−862 MHz ban
- 2.3−2.4 GHz band
- 4.4-4.99 GHz band

In some of these frequency bands, wider operation bandwidth which is capable up to 1Gbps data stream would be allocated. Since LTE-Advanced is the evolved system from LTE and UMTS, user terminals for LTE-Advanced would support these legacy systems as multi-mode terminals. It should be noted that even today, user terminals support multiple frequency bands more than three or four considering the global roaming scenarios.

As an example, Fig.-3 shows a transceiver configuration for multi-mode and multi-band mobile phone terminal. It is a multi-mode terminal since it supports GSM/GPRS (General packet radio service) and W-CDMA. It is a multi-band terminal as it is capable to use GSM/GPRS band in 900MHz or 1800MHz (for Europe), 800MHz and 1900MHz (for North America) as well as UMTS band in 2GHz (Europe, Japan), 850MHz (North America and Japan), and 1.7GHz (in Japan). Although some of the frequency bands for GSM/GPRS and UMTS/LTE are overlapped each other, the transceiver has individual transceiver chains for each radio access technology because of the different nature of the modulated signals and RF requirements, such as maximum transmit powers, unwanted emission limits or receiver blocking requirements. In order to support receiver diversity capability, the transceiver has two receiver chains as well. As can be seen from the configuration, as the number of capable frequency bands or mode is increased, complexity of the transceiver would increased. Considering the higher demand in the mobile market, it is natural that more frequency spectrum is allocated to mobile services and mobile phone terminals should support these new frequency bands additional to the existing bands.

Fig.-3 Operating bands (for FDD UMTS/LTE)

Operating Band		Uplink (UL) operating band BS receive UE transmit	Downlink (DL) operating band BS transmit UE receive	Frequency range			
UMTS	LTE	FUL_low – FUL_high	FDL_low – FDL_high	800	2G	2.6G	1.5G
I	1	1920 MHz – 1980 MHz	2110 MHz – 2170 MHz		x		
II	2	1850 MHz – 1910 MHz	1930 MHz – 1990 MHz		x		
III	3	1710 MHz – 1785 MHz	1805 MHz – 1880 MHz		x		
IV	4	1710 MHz – 1755 MHz	2110 MHz – 2155 MHz		x		
V	5	824 MHz – 849 MHz	869 MHz – 894MHz	x			
VII	7	2500 MHz – 2570 MHz	2620 MHz – 2690 MHz			x	
VIII	8	880 MHz – 915 MHz	925 MHz – 960 MHz	x			
IX	9	1749.9 MHz – 1784.9 MHz	1844.9 MHz – 1879.9 MHz		x		
X	10	1710 MHz – 1770 MHz	2110 MHz – 2170 MHz		x		
XI	11	1427.9 MHz – 1447.9 MHz	1475.9 MHz – 1495.9 MHz				x
XII	12	698 MHz – 716 MHz	728 MHz – 746 MHz	x			
XIII	13	777 MHz – 787 MHz	746 MHz – 756 MHz	x			
XIV	14	788 MHz – 798 MHz	758 MHz – 768 MHz	x			
N/A	17	704 MHz – 716 MHz	734 MHz – 746 MHz	x			
N/A	18	815 MHz – 830 MHz	860 MHz – 875 MHz	x			
XIX	19	830 MHz – 845 MHz	875 MHz – 890 MHz	x			
XX	20	832 MHz – 862 MHz	791 MHz – 821 MHz	x			
XXI	21	1447.9 MHz – 1462.9 MHz	1495.9 MHz – 1510.9 MHz				x

Fig.-4 Operating bands (for TDD UMTS/LTE)

Operating Band		Uplink (UL) operating band BS receive UE transmit	Downlink (DL) operating band BS transmit UE receive	Frequency range			
UMTS	LTE	FUL_low – FUL_high	FDL_low – FDL_high	800	2G	2.6G	3.5G
(a)	33	1900 MHz – 1920 MHz	1900 MHz – 1920 MHz		x		
	34	2010 MHz – 2025 MHz	2010 MHz – 2025 MHz		x		
(b)	35	1850 MHz – 1910 MHz	1850 MHz – 1910 MHz		x		
	36	1930 MHz – 1990 MHz	1930 MHz – 1990 MHz		x		
(c)	37	1910 MHz – 1930 MHz	1910 MHz – 1930 MHz		x		
(d)	38	2570 MHz – 2620 MHz	2570 MHz – 2620 MHz			x	
(f)	39	1880 MHz – 1920 MHz	1880 MHz – 1920 MHz		x		
(e)	40	2300 MHz – 2400 MHz	2300 MHz – 2400 MHz			x	
-	41	2496 MHz – 2690 MHz	2496 MHz – 2690 MHz			x	
-	42	3400 MHz – 3600 MHz	3400 MHz – 3600 MHz				x
-	43	3600 MHz – 3800 MHz	3600 MHz – 3800 MHz				x

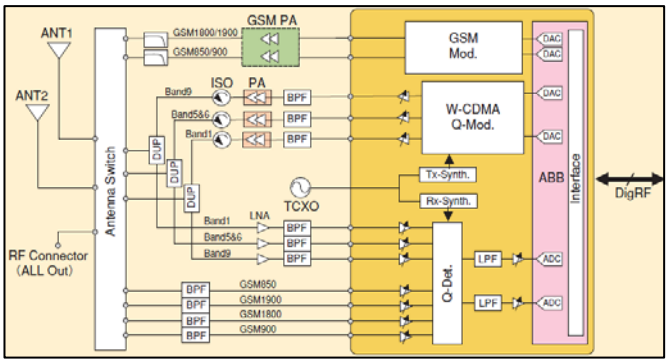

Fig.-3 A transceiver configuration example of multi-mode/multi-band mobile terminal

2. Carrier Aggregation for LTE-Advanced systems

In LTE-Advanced, Carrier Aggregation (CA) is supported. CA will provide comfortable high speed data transmission by support wider transmission bandwidths. A terminal capable to CA may simultaneously receive one or multiple component carriers depending on its capabilities It is possible to aggregate a different number of component carriers of possibly different bandwidths either in the down link or uplink. In typical TDD deployments, the number of component carriers and the bandwidth of each component carrier in uplink and downlink will be the same. Both Intra and Inter band carrier aggregation are considered as potential scenarios. It should cover both of Contiguous Component

Carrier and non-contiguous Component Carrier aggregation. Fig.-4 shows these different cases. The first one is Intra-band contiguous CA in which several contiguous component carriers in a same frequency band are aggregated and wider transmission bandwidth is provided. In the second scenario, plural component carriers in a single band but non-contiguous ones are aggregated as in the middle row in the figure. In this case, there will be a gap between the component carriers and the gap may be used by other RAT (Radio Access Technology) such as GSM, UMTS or LTE. The last scenario is Inter-band CA where component carriers in different frequency bands, for example 800MHz band and 2GHz band, are aggregated. Considering these scenarios, transceiver design should comply with all the requirements for transmitters and receivers as specified in a 3GPP standard [5].

State of the art technologies in RF or signal processing area will be applied for these mobile terminals (see Fig.-5). For instance, tunable RF section using MEMS (Micro Electro Mechanical System) is useful to support multiple frequency bands. SDR (Software Defined Radio) technology will be promising solution to provide multi-RAT (Radio Access Technology) capable signal processor in base band modules. As a transmission technology, MIMO (Multiple Input Multiple Output) transmission-reception or AAS (Adaptive Antenna System) would serve broadband data service with high and stable quality.

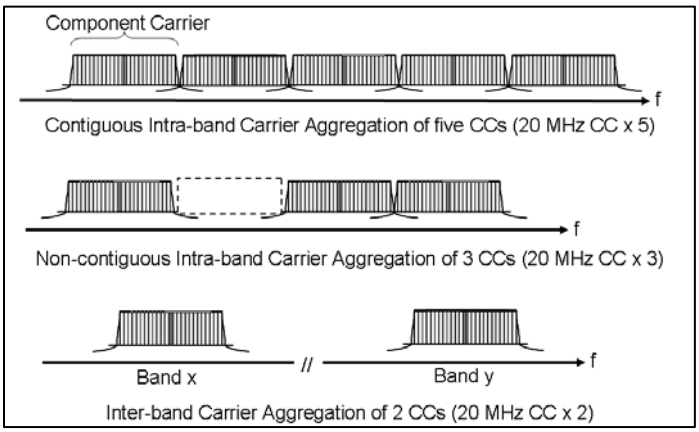

Fig.-4 Carrier Aggregation in LTE-Advanced

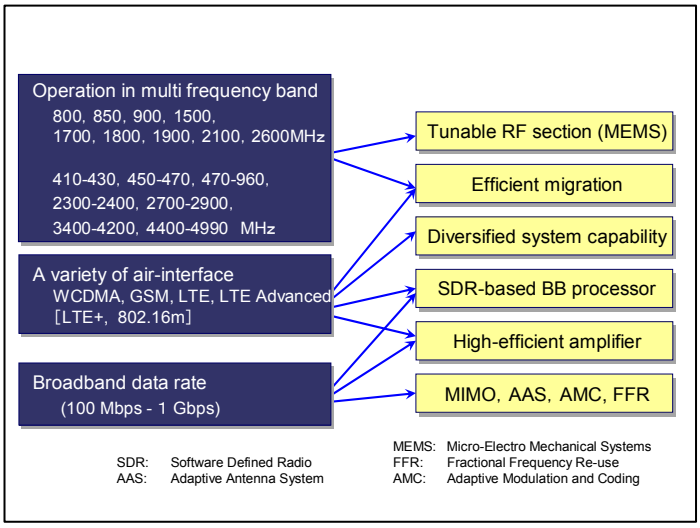

Fig.-5 Technologies for LTE-Advanced

5. Conclusion

Brief introduction of LTE and LTE-Advanced with several key technical aspects, such as a configuration of multi-mode/multi-band mobile terminal transceiver in conjunction with operating frequency bands or Carrier Aggregation feature for LTE-Advanced are made. Considering the increasing expectation or demand from the mobile communication markets, cutting edge technologies cope with several technical challenges will be applied to the coming mobile phone devices which will provide variety of services to the users in a ubiquitous environment.

7. References

1. K. Ohno, M. Sawahashi, and F. Adachi: Wideband Coherent DS-CDMA. In Proc. IEEE Veh. Technol. Conf., pp.779-783 (1995).

2. 3rd Generation Partnership Project (3GPP); TR25.913: Requirements for Evolved UTRA (E-UTRA) and Evolved UTRAN (E-UTRAN)

3. Hyung G. Myung, Junsung Lim, and David J. Goodman, “Single Carrier FDMA for Uplink Wireless Transmission”, IEEE Vehicular Technology Magazine, vol. 1, no. 3, Sep. 2006, pp. 30-38.

4. Recommendation ITU R M.1645, “Framework and overall objectives of the future development of IMT 2000 and system beyond IMT 2000”, June 2003.

5. 3rd Generation Partnership Project (3GPP); TS 36.101: E-UTRA UE radio transmission and reception.