Photonic Millimeter-wave/Microwave signal generation and transmission techniques for a high-frequency Radio Interferometer and a very large antenna array

Hitoshi Kiuchi[1] and *Tetsuya Kawanishi*[2]

[1] National Astronomical Observatory of Japan, 2-21-1 Osawa, Mitaka, Tokyo 181-8588, Japan, hitoshi.kiuchi@nao.ac.jp

[2] National Institute of Information and Communications Technology, 4-2-1 Nukui-kita, Koganei, Tokyo 184-8795, Japan, kawanish@nict.go.jp

Abstract

In the field of large scale radio interferometers, there is a growing need for the photonic highly-stable signal generation and distribution system. In order to maintain signal coherency of the distributed reference-frequency signal, we have developed a photonic millimeter-wave generator and a photonic transmission signal phase stabilizer to transmit a reference signal in the form of frequency difference between two coherent light waves.

1 Introduction

A very large antenna array, such as ALMA, SKA, SMA etc., is a large scale high-frequency radio interferometer array currently under development/ designing. To receive high frequencies, a higher reference frequency is required for the local reference signal, and stability to maintain the signal coherence is also required. To address these issues, the photonic techniques, signal generation and transmission, are indispensable.

2 Photonic millimetre-wave signal generator

One method to generate two optical signals is producing them from a pair of laser sources using optical phase lock loop (OPLL)[1], however, which is susceptible to external influence. A good alternative method to the OPLL scheme is the lithium niobate ($LiNbO_3$) Mach-Zehnder optical intensity modulator (MZM)[2] which is capable of generating two highly stable optical signals (upper sideband and lower sideband components) by applying a sinusoidal microwave signal to an input laser signal. In the Mach-Zehnder structure, the output spectrum depends on the DC bias voltage applied to the electrodes (Fig. 1). The MZM has two operation modes [3]: null-bias point operation mode and full-bias point operation mode. When the bias of the MZM is set to a minimum transmission point (null-bias point), the first-order upper side band (USB) and lower side band (LSB) components are strengthened, and the carrier is suppressed. The frequency difference between the two spectral components is twice the modulation sinusoidal signal frequency. On the other hand, when the bias is set to a maximum transmission point (full-bias point), the optical frequency of even-order (zero- and second-order) components is remained, and the zero-order component can be eliminated with a conventional optical filter. Eliminating the zero-order component (input laser), the remaining is a two-tone optical spectrum whose frequency is four times the modulation frequency. The generated optical signal has high extinction ratio (Fig. 2), and low phase noise (Fig. 3).

3 Phase stabilizer

We have developed two phase stabilizers using the dual difference round-trip phase measurement method with Michelson's interferometer, one is for high-frequency signal [4](Fig. 4) and the other is for low-frequency signal [5] (Fig. 5). Signals generated by the photonic millimeter-wave signal generator (Fig. 1) are sent to the antennas via a long single mode fiber. During the signal transmission through the fiber cable, the cable length

978-1-4244-6051-9/11/$26.00 ©2011 IEEE

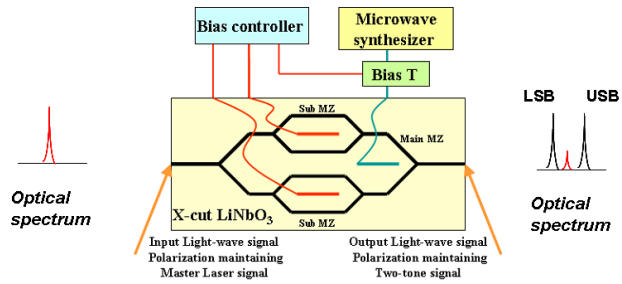

Figure 1: Simplified structure of an optical modulator with two arms and electrodes. Optical phase of each arm is controlled by applying DC bias to the electrodes. Amplitude imbalance due to fabrication error is compensated with sub-Mach-Zehnder trimmers. When two lightwaves are in phase, the output optical signals are strengthened each other. On the other hand, when the phases of the input lightwaves are shifted, the phase-shifted lightwaves are radiated away as higher-order waves, and do not reach the optical waveguide.

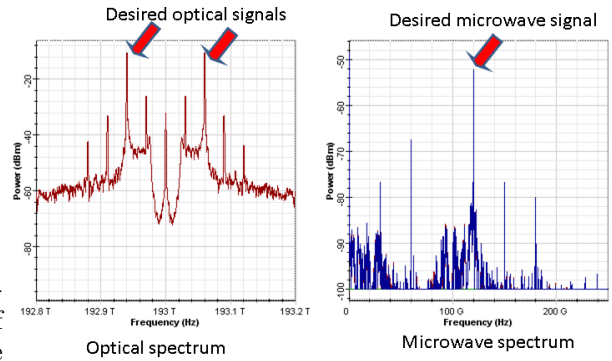

Figure 2: Three Mach-Zehnder structure LN-modulator can provide high-extinction ratio (more than 55 dB [2]) modulation signals. High-extinction ratio performance is effective in suppressing of excessive signals. Suppression of spurious is very important to ensure effective photonic LO signal distribution.

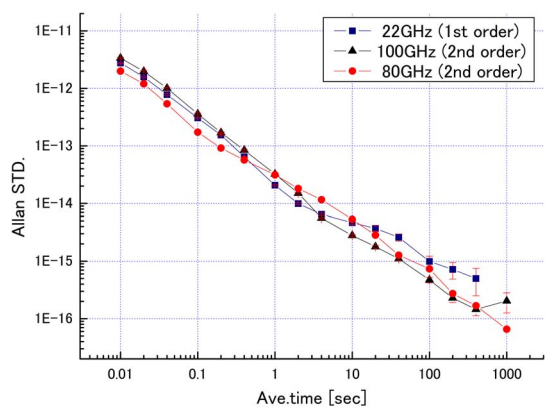

Figure 3: Measured phase stabilities of the high extinction ratio Mach-Zehnder modulator.

delay fluctuation is caused together with polarization mode dispersion, which will impact the performance of coherent signal distribution. The roundtrip phase measurement is performed on each lightwave signal separately. The transmission microwave signal is converted from the two coherent optical signals by a photo mixer. The two transmitted optical signals require phase stability for 1st LO better than 10^{-13} (1sec) in white phase noise in the Allan standard deviation. At each antenna, frequency-shift modulation (ω: 25 MHz) is performed by the optical modulator (optical frequency shifter) for the received optical signals which are then reflected by the optical reflector and returned to the shifter. Then the return trip signals (λ_3 and λ_4) are higher than (λ_1 and λ_2) by 2ω. The same suffix was used by λ and ω. The signals pass through one path in transmission. The frequency shift modulation is used to distinguish the round-trip signal from back-scattered signals. The phase difference between the signal at the starting point of the roundtrip transmission and the returned signal is detected by Michelson's interferometer. Since the frequency-shift modulation frequency is small, its PMD (the chromatic PMD) can be ignorable. In the high-frequency stabilizer, the two-signal separation and the phase shift by Φ are executed on the optical signal. On the other hand, in the low frequency phase stabilizer, they are executed on the microwave signal converted from the optical signal by using the photograph mixer. The high frequency signal stabilizer and the low frequency one have a mutually complementary relationship, and the antenna equipment for phase stabilization is used for both

systems. Measured phase stability is shown in Fig. 6.

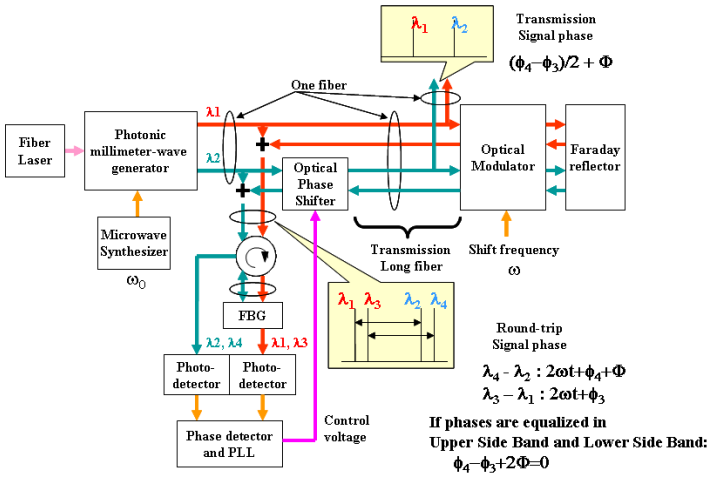

Figure 4: Block diagram of the high frequency ($\geq 20GHz$) phase stabilizer [4].

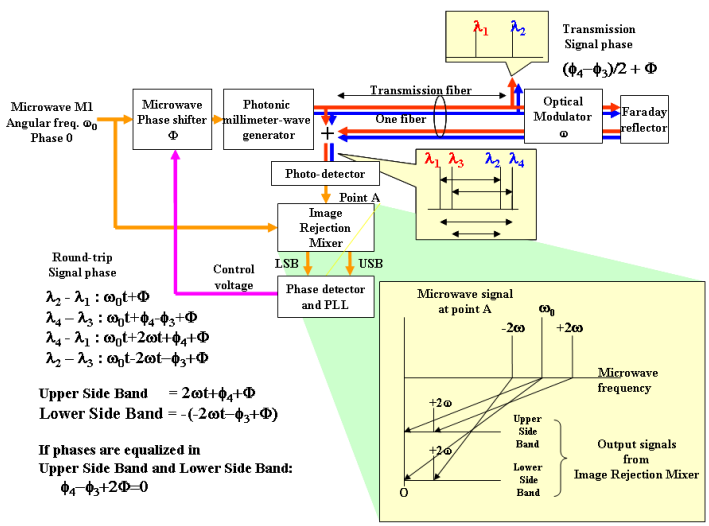

Figure 5: Block diagram of the low frequency ($\leq 20GHz$) phase stabilizer [5]. The phase difference between the microwave M1 and the returned signal is detected by an Image Rejection Mixer.

4 Conclusion

The Mach-Zehnder modulator can generate two coherent light waves with frequency difference equivalent to twice or four times the modulation frequency, which has been authorized in ALMA project. The two spectral components of the two optical signals generated with MZM technique are phase-locked without using any complicated feedback control. Compensation of the Local signal transmission delay is an indispensable technique for accurate interferometrical observation. Chromatic/PMD delay, which is caused during the signal transmission, needs to be reduced because it deteriorates the accuracy of the delay amount by affecting the signal polarization and wavelength. The Double-difference method is more robust to external influences and more accurate than the current scheme which uses one of the two optical signals for measurement.

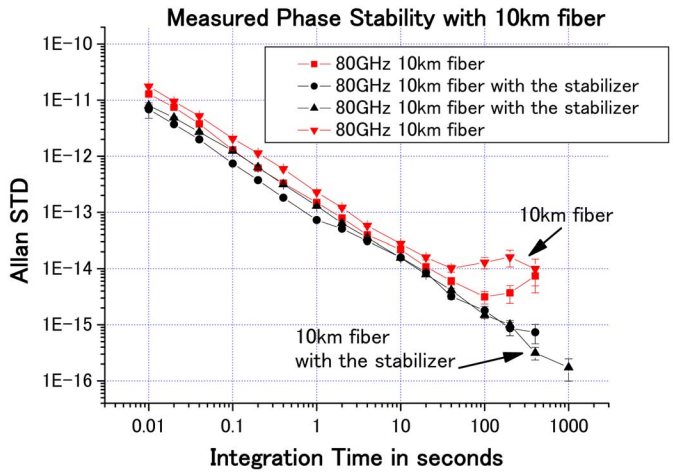

Figure 6: Measured phase noise. When the optical signal (80 GHz) is transmitted through the SMF cable (10 km) without the stabilizer, the phase stability begins to degrade around some tens of seconds integration time, and a Flicker-FM noise appears. In the case of using the phase stabilizer, the degradation of the phase stability is staved off with the white phase noise. In this measurement, the narrow bandwidth PLL filter (so-called the clean-up filter) for the transmission signal was not used.

5 Acknowledgments

The authors appreciate the help received from the Sumitomo-Osaka Cement Inc. in establishing the modulator system.

6 References

1. J.Cliche, and B.Shillue,"Precision timing control for radio astronomy, maintaining femtosecond synchronization in Atacama Large Millimeter Array," *IEEE control syst. mag.*, vol.26, Feb. 2006, pp.19-26.

2. T.Kawanishi, T.Sakamoto, and M.Izutsu,"High-speed control of lightwave amplitude, phase, and frequency by use of electro optic effect," *IEEE J. of selected topics in quantum electronics* , vol.13, Feb. 2007, pp. 79-91.

3. H.Kiuchi, T.Kawanishi, M.Yamada, T.Sakamoto, M.Tsuchiya, J.Amagai, and M.Izutsu,"High Extinction Ratio Mach-Zehnder Modulator Applied to a Highly Stable Optical Signal Generator," *IEEE Trans. Microw. Theory Tech.*, vol.55, Sep. 2007, pp. 1964-1972.

4. H.Kiuchi ,"Highly stable millimeter-wave signal distribution with an optical round-trip phase stabilizer," *IEEE Trans. Microw. Theory Tech.*, vol.56, Jun 2008, pp. 1493-1500.

5. H.Kiuchi ,"Optical Transmission Signal Phase Compensation Method Using an Image Rejection Mixer," *IEEE Photonic Journal*, vol.3, Feb. 2011, pp. 89-99.