The reviews and prospects for radiometer calibration research of BIRMM

C. Y. CHENG, Y. J. Yang, H. ZHAI, F. NIAN, W. HE, T. CHEN

(Beijing Radio Institute of Metrology and Measurement, Address: No.50 Yongding Road, Beijing, China, P. O. Box: 3930, Post Code: 100039, China, chengrang@yahoo.com.cn, yujieyang@vip.sina.com.)

Abstract

The reviews and prospects for radiometer calibration research of BIRMM (Beijing Radio Institute of Metrology and Measurement) are presented in this paper. The paper's interests are concentrated on three principal parts as follows. Firstly, the timetable about research for radiometer calibration target is shown in a figure according to time sequence since 1995. Second, the traceability link for calibration targets, including their operational theory, is introduced in the section III and section IV concisely. Finally, the discussion about two key points of radiometer calibration and summary based on content above are presented in the end.

1. Introduction

The absolute accuracy of remote sensing radiometers is a very important consideration for many applications. One way to achieve absolute radiometer calibration is by using blackbody calibration targets with wide aperture to provide standard reference brightness temperature. Those targets, based on different functions, can be divided into hot target, cool target and temperature adjusted target. The principal research works of BIRMM in radiometer calibration domain is focused on three kinds of calibration target above, such as emissivity measurement, radiator design and temperature controller design, research for uncertain of output brightness temperature and so on. Moreover, the interesting frequency of radiometer calibration for BIRMM is from 3GHz to 500GHz now, and will be expanded to 1GHz and 1THz down and up respectively in the future. The following sections will present more details about the work in the past fifteen years and the prospects for next decade.

2. Timetable for radiometer calibration target research of BIRMM

The plan to research radiometer calibration of BIRMM started in 1970's. Before the 1990, the most works had been done were the research for noise standard design with coaxial connector or waveguide connector and the most memorable work is the foundation of national 10 cm thermal noise primary standard. With the fast development of china's aerospace projections, more and more radiometers have had chances to fly on many platforms (such as satellite, aviation and ball) and been hoped to meet the important applications, for example weather forecast, ocean observation, disaster prevention and reduction, since 1990's. The Fig. 1 presents an outline for BIRMM's memorable events in radiometer calibration targets research from then on.

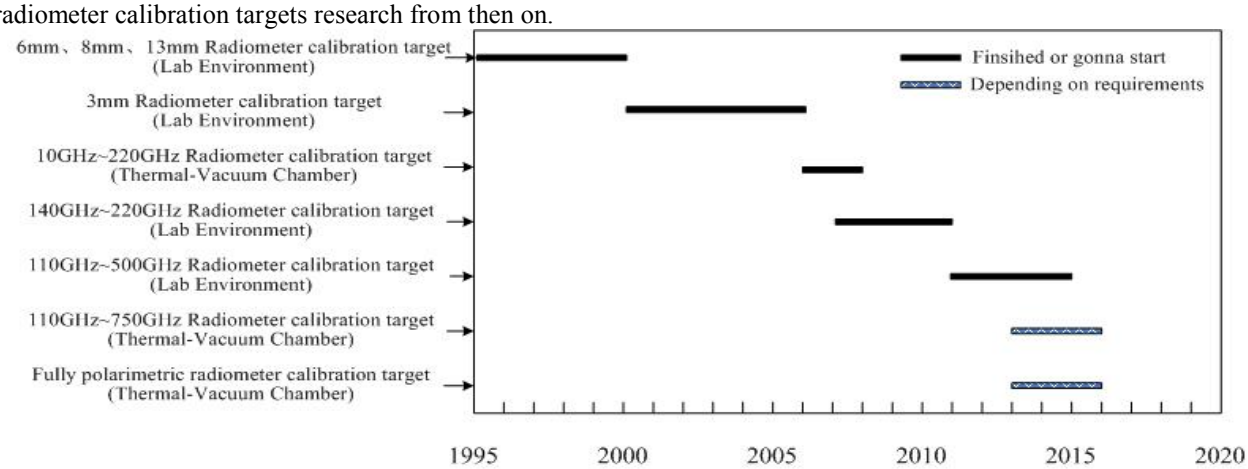

Figure 1. BIRMM's memorable events in radiometer calibration target research since 1995

The 6mm, 8mm, 13mm radiometer calibration target is the first temperature adjusted target for microwave radiometer calibration of china. That can work in Lab environmental with 1.2K uncertainty and 0.1 K resolutions.

978-1-4244-6051-9/11/$26.00 ©2011 IEEE

In 2005, BIRMM became the technical principal of FY-3 microwave radiometer calibration in thermal-vacuum (T-V) chamber. The three microwave radiometers in FY-3, including imaging sounder and temperature sounder together with humidity sounder, need the calibration target can run in the T-V chamber and cover from 10GHz to 220GHz.

There are two directions for the further research projections from now to nearly 2020. One is to develop the short millimeter wave (220GHz~325GHz) and sub millimeter wave radiometer calibration targets up to 750GHz. The other is to build the fully polarimetric radiometer calibration target in the middle of next decade.

3. Operational theory for microwave radiometer calibration target of BIRMM

The operational theory for double polarizations and fully polarizations calibration target (four Stokes parameters) are presented in this section.

3.1 The calibration target for standard radiometer (Tv and Th polarizations)

The fig.2 and fig. 3 show the basic configuration of radiometer calibration targets in Lab environment and T-V vacuum chamber respectively.

In fig.2, the target's radiator almost takes after an array of pyramids (refer to the upper radiator in Fig. 1). It is constructed from an aluminum substrate coated with a less than 2mm thin-layer absorber that having excellent absorbing character for incidence wave in a wide range. In order to monitor the temperature distribution in target's surface, at least seven temperature sensors need to be embedded inside the aluminum substrate. The function of PID controller is that it can adjust its two output signals in proportion to difference between measured value and set value. To acquire an adjustable range from 90K to 320K, the two PID (Proportional-Integral-Differential) outputs of associated parameter of liquid nitrogen cooling combined with resistant heater are used in this layout.

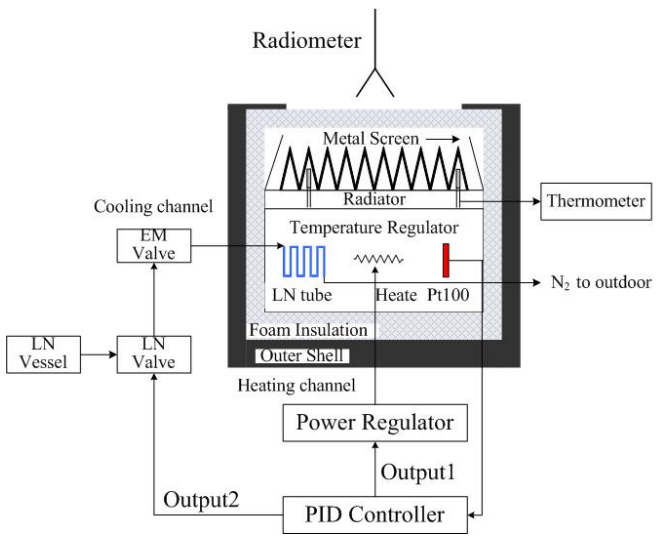

Figure 2. Configuration of Lab environment target

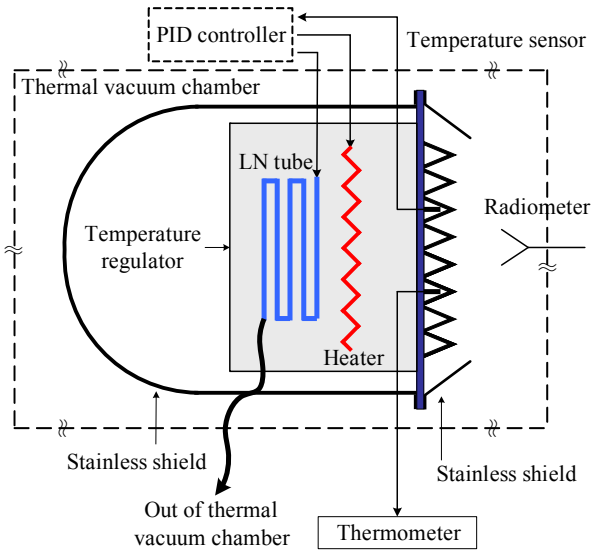

Figure 3. Configuration of T-V chamber target

In T-V chamber, the radiometer calibration target owns a simpler configuration because only radiation thermal transfer and negligible thermal conductivity exist inside. Hence the thick heart insulation layer can be replaced by a stainless shield as shown in fig. 3.

3.2 The calibration target of fully polarimetric radiometer

According to the "Recommended Terminology for Microwave Radiometry (Technical Note 1551)", published by National Institute of Standards and Technology[1], the fully polarimetric radiometer has four Stokes parameters due to the use of complex cross-correlator. Traditional calibration target listed above, just like fig. 3 and fig. 4, do not run well in dealing with four Stokes parameters calibration because not presenting full rank calibration matrix. J. Lahtinen firstly presented a new calibration target configuration to calibrate the fully polarimetric radiometer ten years or more ago.

Then that design was adopted by HUT (Helsinki University of Technology) and NOAA in each calibration target for fully polarimeter radiometer.

BIRMM plans to develop itself calibration target for fully polarimetric radiometer at the middle in next decade. But the basic frame will seem like the one in [2]. But different from the HUT's initial design, the one of BIRMM will add the temperature controller in both cool target and heat target for early model of HUT's. And the most important advantage is that new function can present a more robust calibration matrix in some extension.

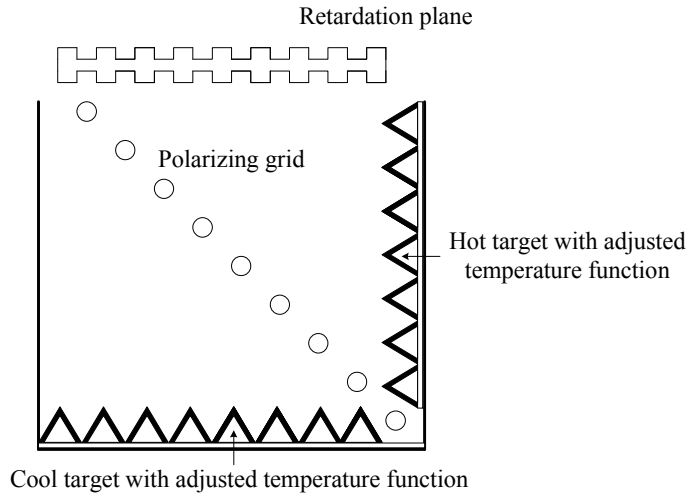

Figure 4. BIRMM's design for fully polarimetric radiometer calibration target

4. Traceability for the radiometer calibration target

There is a quite strong SI traceable requirement for radiometer calibration target now. If the standard brightness temperature is not traceable then the reanalysis of remote sensing data is not traceable or even lame. As far as our calibration target, there are two key parameters that need to be traced to SI absolutely necessarily. The one is physical temperature and the other is emissivity of radiator.

The temperature traceability to SI may be done by calibrating sensors embedded inside the calibration target in several defining fixed points of the ITS-90 (The International Temperature Scale of 1990), such as triple point of water, triple point of Hg and the freezing point of In and so on.

The emissivity traceability to SI can be carried on by tracing to international primary standard just as impedance, power and attenuation and so on. But it is much hard to finish emissivity calibration due to the lack of corresponding primary standards above 110GHz. Therefore the more favorite method that BIRMM taking is by the international comparison. The table I below shows the comparison data between BIRMM and VNIIFTRI (All Russia scientific research institute for physical technical and radio technical measurement). The measurement method can be found at large in [3].

TABLE I
Emissivity Measurement Data Presented by BIRMM and VNIIFTRI

f (GHz)	150	180	183	183.31
Diameter of radiator (mm)	500			
Emissivity of BIRMM(2007)	0.9999	-------	0.9998	0.9998
Emissivity of BIRMM(2010)	0.9997	.09998	0.9997	0.9998
Uncertainty of BIRMM (k=2)	0.0008			
Emissivity of VNIIFTRI(2007)	0.9992	0.9994	0.9993	-------
Uncertainty of VNIIFTRI (k=2)	0.0003			

------- No measurement data

To be explained here is that the international comparison was carried on in 2007, and BIRMM did emissivity measurement again for the same sample in some frequency points in 2010. The uncertainty are also presented in table I. The good repeatability of BIRMM's measurement data is shown between 2007 and 2010. The deviation between

BIRMM and VNIIFTRI is acceptable because different measurement method and equipment were used in this projection.

5. Discussion and Summary

A WMO-BIPM workshop on "Measurement challenges for global observation systems for climate change monitoring-traceability, stability and uncertainty" was convoked in WMO's Geneva headquarters from 30th Mar to1st Apr last year. The traceability of radiometer is one of the most interesting topics in Session A. And a definite fact is that the radiometer calibration ability is behind the accuracy requirements of remote sensing. Hence how to promote the radiometer calibration accuracy will be a very urgent and important task in following years. Two pieces of suggestion are presented here to hope to have some observations.

The first is to build and keep the routine comparison activity for emissivity of radiometer calibration target among some countries and organizations. By using some standard blackbody sample, we can unify the measurement method and decrease the uncertainty arising from systematic error effectively. Secondly, we need research accurate temperature measurement method for radiator surface in Lab environment and T-V vacuum chamber, including both contact measurement and contactless measurement.

The reviews and prospects for radiometer calibration research of BIRMM are presented in this paper. The principal works we focus on are the research and development for wide aperture calibration targets for1GHz to 1THz radiometer. The brightness temperature of our radiometer calibration targets can be traced up to ITS-90 and corresponding microwave primary standard or by international comparison.

6. References

1. J. Randa, J. Lahtinen, etc, "Recommended Terminology for Microwave Radiometry", *National Institute of Standards and Technology Technical Note 1551*, U. S. Government office, Washington, 2008.

2. J. Lahtinin, "Fully Polarimetric Radiometer System for Airborne Remote", *Helsinki University of Technology Laboratory of Space Technology Publications*, Nov, 2003.

3. C. Y. Cheng, L. Fang, Y. J. Yang, Y. M. Chen, "Emissivity measurement study on wide aperture microwave radiator," *International Conference on Microwave and Millimeter Wave Proceedings*, Nanjing, China, 2008, pp. 914-917.