Stub loaded four band slotted Rectangular Microstrip Antenna

***Amit A. Deshmukh*[1] *and K. P. Ray*[2]**

1. MPSTME, NMIMS (U), Vile-Parle (w), Mumbai – 400 056, India,
Email : amitdeshmukh76@yahoo.com, **Tel:** 91 – 22 – 2618 3688, **Fax:** 91 – 22 – 2611 4512

2. RFMS, SAMEER, I.I.T. Campus, Powai, Mumbai – 400 076, India
Email : kpray@rediffmail.com, **Tel:** 91 – 22 – 2572 7183, **Fax:** 91 – 22 – 2572 3254

Abstract: Dual and triple frequency rectangular microstrip antennas by placing open circuit stub on the edges of the patch or by cutting the resonant slots inside the patch are discussed and a four band stub loaded and slot cut rectangular microstrip antenna is proposed. The four band response is experimentally verified which gives close match with simulated result.

1. Introduction:

The dual band Microstrip antenna (MSA) is realized either by placing an open circuit quarter wavelength stub or short circuit half wavelength stub on the edges of MSA [1]. Over the varying frequencies and around the resonance frequency of the MSA, the stub offers either capacitive or inductive impedance and realizes dual frequency response. These frequencies for required design are tuned by properly selecting the stub dimensions. When the slot of either quarter wave in length or half wave in length is when cut inside the patch, adds another resonant mode near the patch resonance frequency and gives dual frequency response [2]. The two frequencies have the same polarization if patch and slot modes are in the same direction and the dual polarization is realized when these modes are orthogonal to each other. The dual frequency MSA with same polarization is also realized when the slots are cut in such away that they reduces higher order mode resonant frequency of the patch and along with the fundamental mode gives dual frequency operation [3]. In this paper, dual and triple band stub loaded or resonant slot cut rectangular MSA (RMSA) are discussed and four band antenna by integrating half U-slot and rectangular slot inside the stub loaded RMSA is proposed. These RMSAs were first analyzed using IE3D software on glass epoxy substrate ($\varepsilon_r = 4.3$, h = 0.159 cm, and tan $\delta = 0.02$) [4]. The four band antenna response is experimentally verified.

2. Dual and Triple band RMSAs

A rectangular slot cut dual band RMSA is shown in Figure 1(a). All the dimensions shown in figure are in cm. The RMSA is designed to operate around 900 MHz. The slot which is nearly quarter wave in length (one side open circuited and other side short circuited) is cut on one of the radiating edges and its dimensions are chosen as per the required dual frequency. For the dual band response, the slot dimensions, its separation from the feed point axis and the feed point location have been optimized using IE3D. The dual frequencies are 817 and 908 MHz with a bandwidth (BW) of 13 and 17 MHz, respectively as shown in Figure 1(b).

In another dual band RMSA, a Half U-slot is cut inside the RMSA as shown in Figure 2(a). The inner slot length nearly equals quarter wavelength at the required frequency. However, the better approximation of the slot frequency is given by equating the sum of outer and inner slot length, to half the wavelength. The vertical slot length increases the impedance for patch mode and reduces its frequency. The feed point is placed along the center of the width to ensure radiation pattern with lower cross-polarization levels. For the optimized MSA, the simulated dual frequencies and BW are 794 and 1091 MHz and 11 and 16 MHz, respectively as shown in Figure 2(b).

The dual band open circuit stub loaded RMSA is shown in Figure 3(a). The stub length is nearly quarter wave in length around the resonance frequency of RMSA. Thus it offers capacitive impedance for the frequencies below the patch resonance and inductive impedance for the frequencies above patch resonance and realizes the dual frequency response. For the required dual frequencies the dual band response is realized by optimizing the stub

dimensions and the feed point location. In order to have proper impedance matching the feed point is placed on the other side of the stub as shown in Figure 3(a). The dual frequencies are 797 and 987 MHz with the BW of 10 and 14 MHz, respectively as shown in Figure 3(b). The radiation pattern at both the frequencies is in the broadside direction with lower cross-polarization levels.

To realize the triple frequency response, more than one resonant slot is integrated inside the same patch. The triple frequency half U-slot and rectangular slot cut RMSA is shown in Figure 4(a). The half U-slot is cut on the non-radiating edge of RMSA and rectangular slot is cut on the radiating edge of the RMSA. The slot dimensions are selected such that three different resonance frequencies are realized from the configuration. For tri-band response, the dimensions of both the slots, their separation from the feed point axis and the feed point location have been optimized using IE3D. The simulated frequencies are 755, 794 and 1132 MHz with a BW of 14, 13, and 19 MHz, respectively as shown in Figure 4(b).

3. Four band RMSA

These multi-frequency techniques of slot and stub are combined to realize the four band frequency response. A four band antenna realized by cutting the half U-slot on the non-radiating edge and horizontal slot on the radiating edge of the stub loaded RMSA is proposed as shown in Figure 5(a). The four band response is due to the two slot modes and two stub loaded patch modes. To optimize for the designed frequencies the dimensions of the slots and stub are selected properly. Since the vertical dimension of half U-slot affects the impedance variation along the patch, the input impedance at the four frequencies is optimized by properly selecting the slot length for the required half U-slot frequency and further by placing the feed point on the other side of the stub. For the dimensions shown in Figure 5(a), the simulated input impedance plot is shown in Figure 5(b). The frequencies and corresponding BW are, 668, 828, 892 and 1083 MHz and 10, 13, 10 and 16 MHz, respectively. The four band frequency response is experimentally verified and its input impedance plot is shown in Figure 5(c). The measured frequencies and corresponding BW are, 667, 826, 889 and 1081 MHz and 11, 12, 12 and 13, respectively. The radiation pattern is in the broadside direction at all the frequencies.

4. Conclusions

The dual and triple bands RMSAs by cutting resonant slots inside the patch or by placing quarter wavelength stub on the edges of the RMSA are discussed. By integrating slot and stub technique in the same patch a four band antenna is proposed. The four band antenna response is experimentally verified and it gives close match with the simulated result. The radiation pattern is in the broadside direction with lower cross-polarization levels at all the frequencies.

References

[1] G. Kumar and K. P. Ray, *Broadband Microstrip Antennas*, Artech House, USA, 2003

[2] K. L. Wong, *Compact and Broadband Microstrip Antennas*, John Wiley & sons, Inc., New York, USA

[3] S. Maci, G. B. Gentill and P. Piazzesi, "Dual band slot loaded Antenna", *IEEE Transactions on Antennas and Propagation*, 1995, 142, (3), pg. 225 – 232

[4] IE3D 9.2, Zeland Software, Freemont, USA

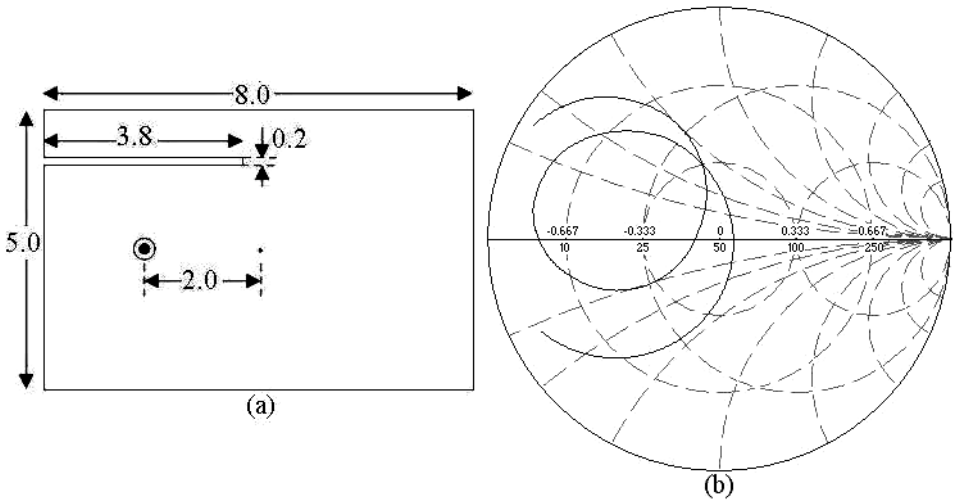

Figure 1: (a) Dual band rectangular slot cut RMSA and its (b) simulated input impedance locus

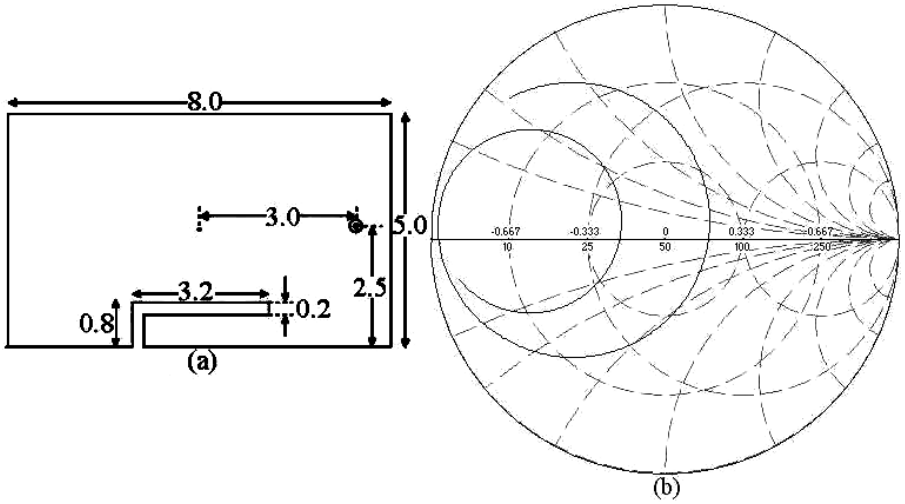

Figure 2: (a) Dual band half U-slot cut RMSA and its (b) simulated input impedance locus

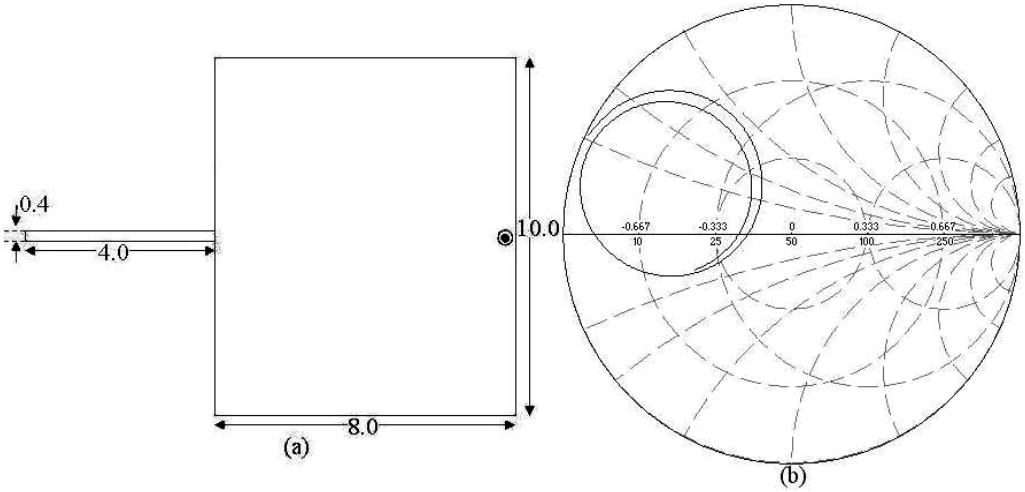

Figure 3: (a) Dual band stub loaded RMSA and its (b) simulated input impedance locus

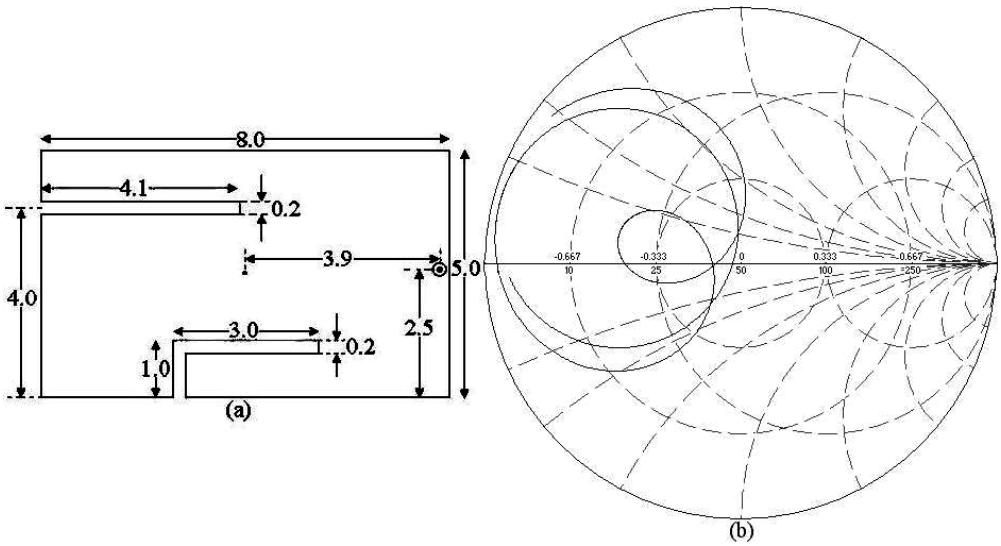

Figure 4: (a) Triple band RMSA and its (b) simulated input impedance locus

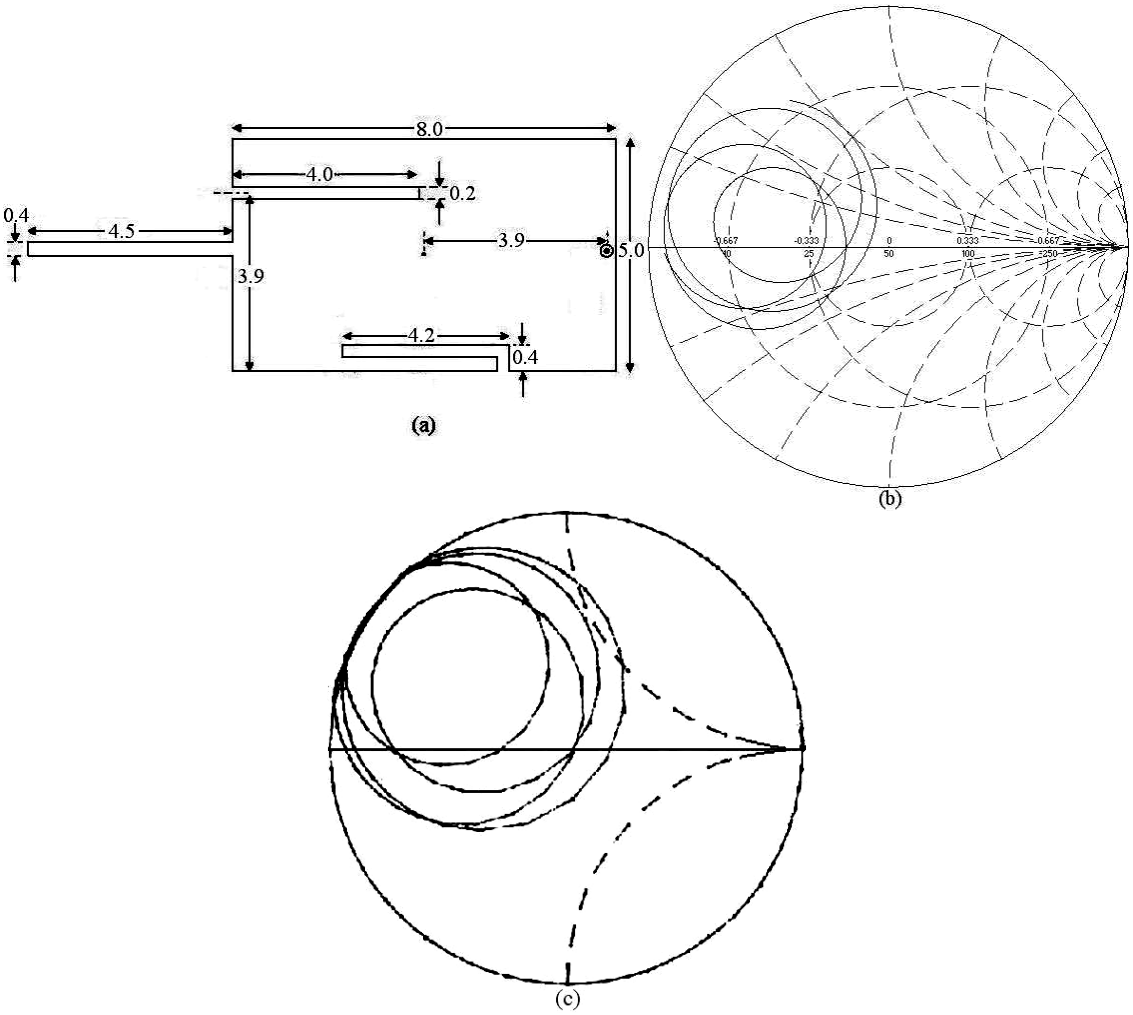

Figure 5: (a) Four band RMSA and its (b) simulated and (c) measured input impedance locus