Wireless power transmission system for a Micro Aerial Vehicle

***Eri Shimane*[1], *Alseny Diallo*[2], *Takashi Komaru*[3], *Kimiya Komurasak*[4] *Yoshihiro Arakawa*[5]**

[1]Department of Advanced Energy, The University of Tokyo, 5-1-5 Kashiwanoha, Kashiwa-shi, Chiba 277-8561, Japan
shimane@al.t.u-tokyo.ac.jp

[2] Department of Advanced Energy, The University of Tokyo, 5-1-5 Kashiwanoha, Kashiwa-shi, Chiba 277-8561, Japan
alseny diallo@al.t.u-tokyo.ac.jp

[3]Department of Aeronautics and Astronautics, The University of Tokyo,7-3-1 Hongo, Bunkyo-ku, Tokyo 113-8656, Japan
komaru@al.t.u-tokyo.ac.jp

[4] Department of Advanced Energy, The University of Tokyo, 5-1-5 Kashiwanoha, Kashiwa-shi, Chiba 277-8561, Japan
komurasaki@k.u-tokyo.ac.jp

[5]Department of Aeronautics and Astronautics, The University of Tokyo,7-3-1 Hongo, Bunkyo-ku, Tokyo 113-8656, Japan
arakawa@al.t.u-tokyo.ac.jp

Abstract

Wireless power transmission system for a Micro Aerial Vehicle using microwave has been studied. In a transmitter system a microwave beam was formed and steered from -9deg to +9deg. In a rectenna system, eight rectennas were arrayed and connected in parallel to drive an electric motor on an MAV model at the altitude of 80cm from the transmitter emitting 3.5W power in total. In a tracking system, two pairs of receiver patch antennas with a leaf pattern were set in rectangular coordinates to detect the position of the MAV while it is circling over the transmitter.

1. Introduction

Wireless power transmission system for a Micro Aerial Vehicle using a microwave beam has been developed. This system has been intensively studied as the technology for the Solar Power Satellite (SPS) system, in which microwave is transmitted from a satellite to the ground [1, 2]. The concept of this system is following. A MAV working over the area struck by disaster, for example, comes to the power station when its battery becomes low. The battery is charged by receiving the microwave beam transmitted from a phased array transmitter while it is circling above the power station and goes back to the working area without landing and take-off. Figure 1 shows the system developed in our laboratory [3, 4]. It consists of three sub-systems; a transmitter system, a rectenna system, and a tracking system.

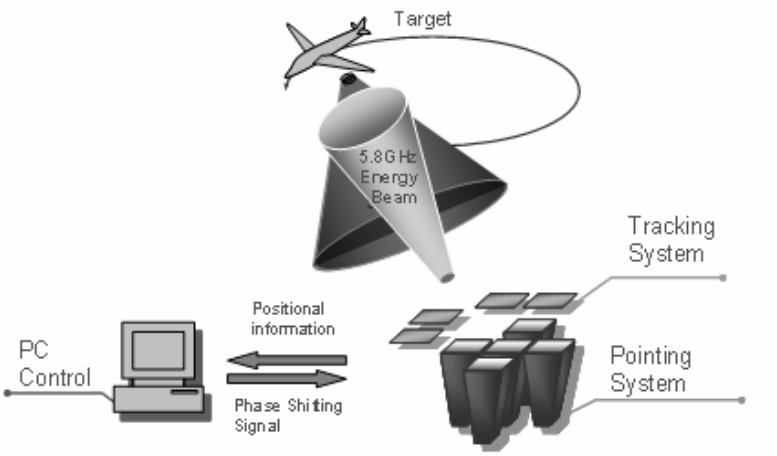

Figure 1. System of microwave power supply to MAV.

In the transmitter system, a microwave beam of 5.8GHz is formed and steered using a phased array antenna. In the rectenna system, the microwave power received by an antenna is converted to DC power by an in-house rectifier and used to drive an electric motor on a MAV model. In the tracking system, the position of the MAV is detected using a software-retro-directive mechanism. The microwave beam from the transmitter system is pointed to the MAV using the information of its position analyzed in the tracking system and the MAV flies by the electric motor on it using the power received by the rectenna system.

2. Transmitter System

Pointing and steering of a 5.8GHz microwave beam was achieved by controlling the phase of microwaves emitted from the five-element antenna called the phased array system, not by mechanical control of the antenna's attitude.

Figures 2 and 3 show the picture of the microwave circuits and geometry of the antenna, respectively. Five horn antennas were used for the antenna elements. Each horn antenna transmits 0.7W power and each phase of microwaves was controlled by the phase shifter connecting a PC. The beam divergence was about 9deg, which corresponds to the beam quality factor M^2=1.6. The beam steering angle was from -9deg to +9deg. The specifications are listed in Table 1.

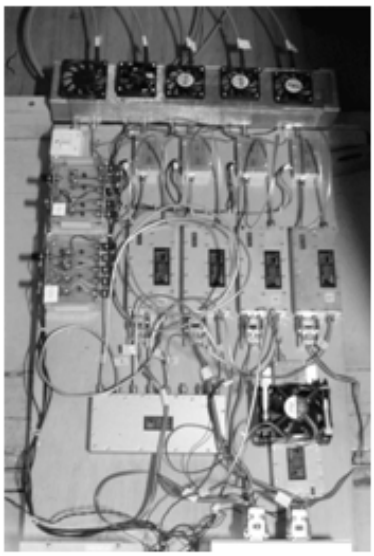

Fig. 3. The picture of the antenna array system.

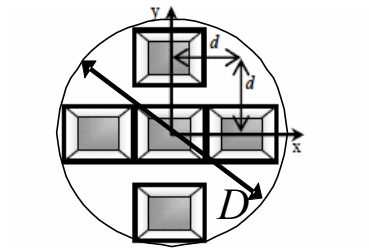

Fig. 3. Geometry of the five arrayed antenna elements.

Table 1. Specifications of the five-element phased array antenna.

Parameters	values
microwave frequency	5.8GHz
wavelength, λ	51.7mm
total transmission power, *P*	3.5W
array pitch, *d*	110mm
	(*d*/λ=2)
diameter of the array, *D*	330 mm

3. Rectenna System

The rectenna system consists of a receiver antenna on the front side and a rectifier circuit on the back side (Fig.5). The patch antenna for circular polarization was used as a receiver antenna for constant power conversion at various MAV's yaw angle with respect to the polarization axis of the transmitted wave.

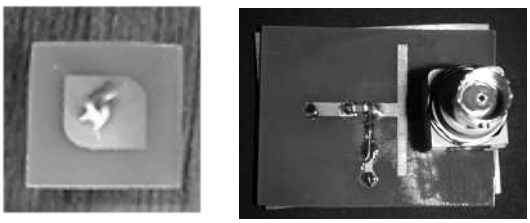

Fig. 5 A leaf pattern patch antenna (left) and rectifier circuit (right).

To obtain electric power enough to drive an electric motor on an MAV, eight rectennas was connected in parallel in Fig.6. Figure 7 shows the rectifying characteristic of single and eight-rectenna arrays at 80cm from transmission antenna. The measured output voltage of eight-element array was slightly lower than the predicted. As a result, the electric motor driving was demonstrated at the altitude of 80cm from the transmitter emitting 3.5W power in total.

Fig. 6. Eight-rectenna array.

4. Tracking System

In the tracking system, the software retro-directive function is under development. This system receives the pilot signal of microwave sent from the MAV and analyzes its current position using the phase difference. Figure 8 shows the block diagram tracking system.

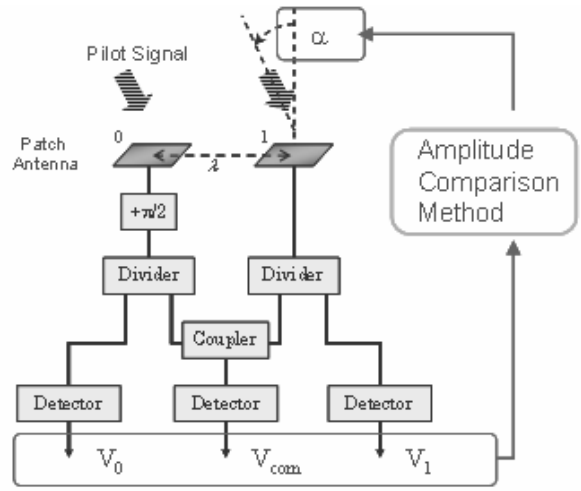

Fig. 7. The block diagram of tracking system.

As a receiver, two patch antennas were aligned with the pitch of λ. An analog phase shifter was inserted in one line to make π/2 of phase difference to each other. Divided and coupled microwave signals are rectified using a commercially available detectors. Finally three DC outputs V_0, V_{com}, V_1 are read in the PC. The incident angle of a pilot signal α is computed by a LabVIEW program.

For tracking a MAV while it is circling, two units of antenna system were set in the rectangular coordinates. The incident angles α_x and α_y are analyzed in a PC. Leaf pattern antennas same is employed to detect the linearly-polarized wave despite the MAV yaw angle.

5. Conclusion

In the transmitter system the microwave beam from five horn antennas was formed using phased array system. The beam divergence was about 9deg and the steering angle was also 9 deg.

In the rectenna system, eight rectennas were arrayed and connected in parallel minimizing the array pitch to drive an electric motor. And an electric motor was driven by eight-rectenna array at 80cm from the transmitter.

In the tracking system, two units of antenna system with a leaf pattern patch were set in the rectangular coordinates to track a circling MAV.

6. Acknowledgments

This study is supported by The University of Tokyo 21st century COE program Innovative Aerial Robot Project.

7. References

1. Shinohara N. and Matsumoto H.: Experimental study of large rectenna array for microwave energy transmission, *IEEE Trans. on Microwave theory and Techniques*, 46 (3), pp. 261-268, 1998.

2. Fusco V. F., Roy R., Karode S. L., "Reflector effects on the performance of a retrodirective antenna array," *IEEE Trans. on Antennas and Propagation*, Vol. 48, No. 6, 2000, pp. 946-953.

3. Komatsu S., Katsunaga K., Ozawa R., Komurasaki K., and Arakawa Y.: Power Transmission to a Micro Aerial Vehicle, AIAA paper 2007-1003, 2007.

4. Shimane E., Komatsu S., Komurasaki K., and Arakawa Y.: A MAV Flight using Microwave Power Supply, AIAA paper 2008-1149, 2008.