Modeling of the Reverberation Chamber Method for the Analysis of PLC System Immunity

***R. De Leo*, G. Gradoni, F. Moglie, V. Mariani Primiani**

Dipartimento di Elettromagnetismo e Bioingegneria – Università Politecnica delle Marche – via Brecce Bianche
60131 Ancona – Italy – email: r.deleo@univpm.it

Abstract

The paper deals about the reverberation chamber (RC) method applied to the immunity analysis of Power Line Communication (PLC) systems for aircraft applications. More precisely, this testing method is modeled by a home-made Finite Difference Time domain (FDTD) numerical tool. Both the testing environment (RC) and the device under test (PLC network) are complex systems and their interaction requires a complete description of the RC field in a statistical sense and an accurate representation of the PLC network including cables and enclosures. The RC well represents an aircraft cabin, where multiple wall reflections affect the field propagation. A realistic structure has been fabricated to experimentally validate the numerical approach.

1. Introduction

On-board communications are nowadays necessary inside aircraft not only for functional and diagnostic purposes but also to provide passenger's connectivity (Internet, personal communication by cellular phones, entertainments, etc.). Current instrumentation systems are dependent on installing wires throughout a test vehicle independent of existing wires on the vehicle. The ability to transfer data over power lines is a technology that continues to mature. Power line networks already exist throughout most aircraft vehicles. It thus seems appropriate to consider implementing data over power lines for test and evaluation since this could reduce installation costs and schedules significantly [1] . Use of the power distribution network would provide this space diversity, since standard engineering practices normally call for segregation of power and communication cables. There are several other advantages in re-using an existing cabling infrastructure: no new wire installation, minimal additional weight to be taken into orbit (basically, the modem electronics but not the cabling), and the possibility of networking virtually all systems (since all use power) at the cost of adding only the modems (and not the cabling) [2].

In using existing power line for data communication several EMC problem could arise. Mainly, the susceptibility aspects of such a system is of particular interest because of many electromagnetic sources coexist inside the cabin. In particular, radiated susceptibility is important because the power line acts like a receiving antenna operating inside an ambient that is essentially a metallic enclosure (the cabin) similar to an overmoded resonant cavity even if with a low-medium quality factor values due to the presence of absorbing material and many apertures (windows). For this reason, the RC is well representative of such an environment, and therefore it is used for immunity tests. Due to the complexity of aircraft power lines both Differential Mode (DM) and Common Mode (CM) field coupling is of interest to analyze the system immunity. A PLC systems consists into a combination of shielded electronics connected by bundles of cables whose distance from metallic plane can changes during the their routing inside the aircraft. The equipment-level enclosures typically exhibits apertures and the cables penetrate metallic compartments via connectors that introduce discontinuities for the data transmission. Such a complex geometry require an accurate modeling to predict the external field coupling and therefore in the present paper a in-house FDTD code [3] is used to describe the all elements of the communication chain. The same FDTD code is used to describe the RC field in terms of a proper summation of plane waves having arbitrary polarization, incoming direction and phase [4]. This formulation simply reduces the original immunity problem to the solution for the interaction of a single plane wave and the structure under test. The application of the superposition of the effects allows to achieve the solution for the complex field which is present inside an aircraft cabin.

2. Formulation of the Problem

2.1 Chamber Field Modeling

An open-source software was developed in order to simulate a complex electromagnetic environment – i. e. a reverberation chamber - using the FDTD method: the reverberation field is depicted by the well known plane wave superposition [3]. In fact, our simulator reproduce the impinging of N plane waves coming from any possible direction, with a uniform probability over the sphere surface. The chamber field results from [5]:

$$\langle E \rangle = \frac{15}{16}\sqrt{\frac{\pi}{3}} E_0 \sqrt{N}$$

where E_0 = 1 V/m and N = 100. To account for the M independent stirrer positions inside the RC, M = 200 simulations were repeated for different plane wave set. This choice is based on a real chamber FDTD analysis [6]. In order to compare numerical and experimental results, Eq. (1) was used to normalize enclosure and bundle cable coupling voltages and currents.

2.2 Metallic Shield and Bundle Cable Modeling

Enclosure with apertures and cable wires were simulated using the 3D and 1D FDTD method [7]. It is well known that this technique allows to retrieve field values resolving discrete Maxwell's equations in the staggered grid used to model the physical region to analyze [8]. In order to simulate differential and common mode coupling, a transmission line and a single shielded cable were implemented in different simulations. A simple Perfect Electric Condition (PEC) was used to modeling metallic walls of the enclosure and wires. Each structure was excited by the reverberation field explained in the previous paragraph.

3. Experimental Facility Description

Immunity of the PLC system was investigated by means of a random electromagnetic field, generated by a reverberation chamber. The RC dimensions are 6 m × 4 m × 2.5 m. The fundamental mode resonance frequency of the RC is 31.22 MHz, and therefore, the theoretical lower usable frequency (LUF) is about $6f_0$ = 187 MHz [9]. The transmitting and receiving antennas are log-periodic operating between 300 MHz and 5 GHz (Schwarzbeck model USLP 9143). A network analyzer (NWA) Agilent E5071 was used to measure the power captured by enclosure and bundle cable, while a triaxial electric field sensor (Holaday HI 6005) was used to characterize the chamber field The chamber works in the tuned-mode. The NWA works in a continuous wave (CW) mode and during the sweep time it acquires 1601 points. On the other hand, the field sensor has a sampling rate of 18 Sample/s. In this way, the electric field probe acquires samples during a span in synchrony with the NWA. The ensemble average electric field value in the chamber for each CW frequency has been measured, which is necessary to start simulations. In our tests, the tuner moves with 1 degree steps over 360 positions and, for each one, a measurement was done within 200 MHz and 5.8 GHz. Since the chosen frequency step was 250 kHz and the NWA acquires a maximum of 1601 samples, the investigated range was divided in 14 parts of 400 MHz. Inside the enclosure, a linear monopole of 2 cm copper wire was used to model a particular electronic configuration, for example a trace of a PLC modem printed circuit board (PCB). Tested metallic enclosure, single wire and transmission line were inserted inside the working volume of the chamber. CM and DM currents were measured by a current probe. The S21 scattering parameter was measured in order to evaluate the coupling signal of each DUT. In particular, the output voltage of monopole and current probe was calculated as follows:

$$V = S_{21}\sqrt{50 P_{NWA}}$$

where P_{NWA} is the NWA output power, which has been accurately measured, including the transmitting antenna cable, by means of the spectrum analyzer R&S FSP13. More details on the measurement set-up, can be found in [10].

4. Results

Three canonical situations were analyzed: an equipment-level enclosure, a bifilar line, a floating wire and a braided shield coaxial cable. These structures represent elementary components of a complex PLC system and are particularly suitable to experimentally validate the code capabilities.

4.1 Equipment-level enclosure

A metallic case with apertures of different size and shape was realized in order to simulate the PLC device shield.
The enclosure model (Lx = 30 cm, Ly = 26.5 cm, Lz =8.5 cm) is made of cubic cells of dimension 2.5 mm (60×53×34 cells). Fig. 1 shows the case geometry by field infiltrations through the frontal apertures; further slots are present on the opposite side. This allows a good spatial resolution in the investigated frequency range: even for smallest apertures a minimum of two cells were employed. Moreover, outside PEC planes, absorbing boundary conditions (ABC) were applied in order to vanish plane waves reflection. Using the Friedrich-Courant-Lèvy condition we got 4.8 ps time step. Fig. 2 shows the comparison between numerical and experimental voltages, when the probe length is 20 mm.

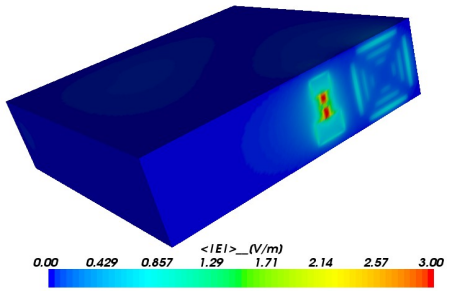

Fig. 1. Electric field magnitude for $f = 1$ GHz

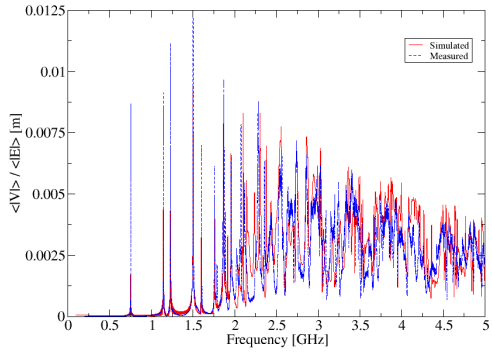

Fig. 2 Coupling voltage

4.2 Differential Mode coupling

The transmission line was realized with two copper wires of 1 mm diameter and 25 mm spaced, with a characteristic impedance $Z_0 = 470\ \Omega$. The length of the line was $L = 500$ mm, fig. 3. A commercial resistor of $Z_L = 47\ \Omega$ (75%, 0.25 W) was used to terminate the line at one end, whereas a copper wire with the same line wire diameter was soldered at the other end to realize the short circuit and to allow the current probe insertion. The resistor was chosen because, in realistic situations, circuits exhibit resistive loads at least at one line termination. The line was simulated using 2.5 mm spatial step a lumped element was inserted into the grid to simulate the resistive load. Fig. 4 shows the comparison between normalized currents acquired on the short circuit.

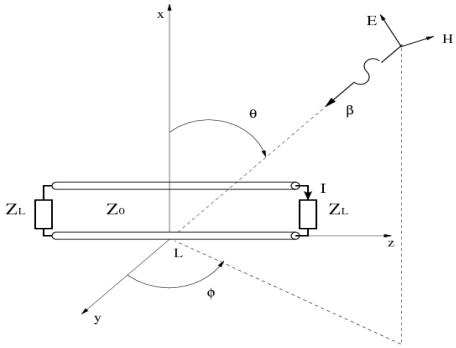

Fig. 3 Transmission line geometry

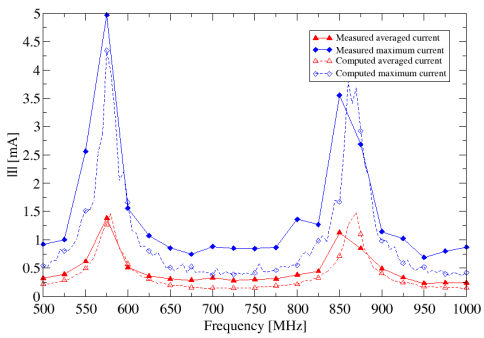

Fig. 4. Line termination voltage

4.3 Common Mode coupling on shielded cables

Finally, a coaxial cable with braided shields was investigated. This represents an interesting situation where a common mode coupling occurs between the chamber field and the cable shield. The induced common mode current produces a disturbance penetration inside the cable inner circuit through the shield transfer impedance, resulting in a final DM effect at the cable termination. In particular, the voltage at the cable termination is numerically computed and compared to that measured in an RC. The cable has a total length $L = 3$ m. There is a semi-rigid coaxial cable $l1 = 2$ m long with a diameter $d1 = 7$ mm, and a cable RG58 $l2 = 1$ m long with a diameter $d2 = 5$ mm, fig. 5. The RG58 terminates into a load of 50 Ω. They are connected by 3 connectors $l3 = 45$ mm long with a diameter $d3 = 20$ mm. A female 50 Ω load is used to terminate the RG58 cable. It is important to note that the presence of connectors and adapters along the cable introduce a section variation and discontinuities, making impossible an analytical solution for the induced current. The adopted numerical code is able to account for this discontinuities that are evident in actual cable harness. The simulated and measured cable voltages are compared. For each frequency, the comparison is made by using the average voltage, measured over the stirrer rotation, and the average voltage computed over the M simulations. To achieve an absolute comparison, the experimental and numerical voltage data are normalized to the averaged measured and computed total electric field respectively in order to have a voltage referred to an averaged field of 1 V/m. Fig. 6 shows this comparison in the frequency range that goes from 500 MHz to 4 GHz.

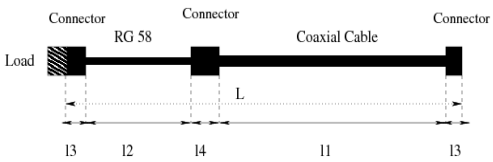

Fig. 5 Cable and test fixture geometry

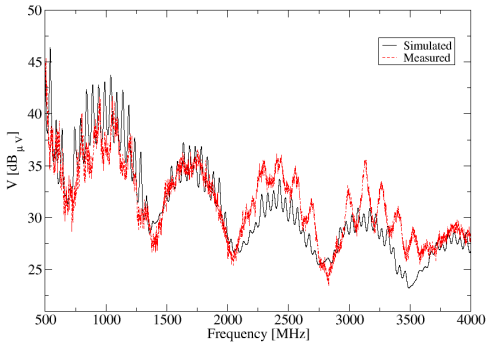

Fig. 6 Cable voltage

5. Conclusion

The paper has shown how to simulate accurately the coupling between a PLC system and the complex field which is present inside an aircraft cabin. The field action was replicated by a RC for both simulation and measurements because of the statistical nature of the field of such environment. The simulation effort is useful to predict the immunity level of the power line network starting from the characterization of the field inside the cabin, its spectrum and amplitude statistics. Results are useful to design the PLC systems in terms of signal integrity prediction, correct choice of the injection points and formulation of the coupling/decoupling network topology. Numerical results were experimentally validated showing the reliability of the applied technique.

7. References

1. Charles H. Jones, "Communications Over Aircraft Power Lines", *IEEE International Symposium on Power Line Communications and its Applications*, CA (USA), 2006, pp. 149-154.

2. Stefano Galli, Thomas Banwell, David Waring, "Power Line Based LAN on Board the NASA Space Shuttle", *IEEE 59th Vehicular Technology Conference*, *VTC 2004-Spring*, USA, May 2004, pp. 970-974, vol.2.

3. F. Moglie and A. P. Pastore, "Fdtd analysis of plane waves superposition to simulate susceptibility tests in reverberation chambers", *IEEE Transactions on Electromagnetic Compatibility*, vol. 48, no. 1, pp. 195–202, Feb. 2006.

4. D. A. Hill, "Plane wave integral representation for fields in reverberation chambers", *IEEE Transactions on Electromagnetic Compatibility*, vol. 40, no. 3, pp. 209–217, August 1998.

5. L. Musso, V. Berat, F. Canavero, and B. Demoulin, "A plane wave integral monte carlo simulation method for reverberation chambers", *IEEE Transactions on Electromagnetic Compatibility*, vol. 40, no. 3, pp. 209–217, August 1998.

6. F. Moglie, "Convergence of the reverberation chambers to the equilibrium analyzed with the finite-difference time-domain algorithm", *IEEE Transactions on Electromagnetic Compatibility*, vol. 46, no. 3, pp. 469–476, August 2004.

7. A. Taflove and S. C. Hagness, *Computational Electrodynamics: The Finite-Difference Time-Domain Method*, 2nd ed. Boston: Artech House, 2000.

8. K. S. Yee, "Numerical solution of initial boundary value problems involving maxwell's equations in isotropic media", *IEEE Transactions on Antennas and Propagation*, vol. 14, no. 4, pp. 302–307, May 1966.

9. IEC 61000-4-21 CVD, EMC, *Testing and Measurement Techniques Reverberation chamber test methods*, 2000.

10. G. Gradoni, F. Moglie, A. P. Pastore, and V. M. Primiani, "Numerical and experimental analysis of the field to enclosure coupling in reverberation chamber and comparison with anechoic chamber," *IEEE Transactions on Electromagnetic Compatibility*, vol. 48, no. 1, pp. 203–211, February 2006.