ON THE ELEMINATION OF FALSE LOCKING IN OPTICAL PHASE LOCK LOOPS THROUGH INJECTION SYNCHRONIZATION

A. Mukherjee[1], A. Banerjee[2], B.N.Biswas[3]

[1]arindum78@gmail.com, [2]abhb87@gmail.com , [3]baidyanathbiswas@yahoo.com
Academy of Technology, Aedconagar, Hooghly-712121, West Bengal, India

Abstract

A homodyne optical phase locked loop with external injection is considered. Even if the loop is stable, the presence of loop propagation delay can cause acquisition difficulties in the form of false locks. In this paper, we propose a method for the elimination of false locking phenomenon and illustrate a method of calculating the locking range in presence of injection in OPLL. It appears to the authors that no one has reported in this regard.

Indexing terms: False locking, Optical phase locked loop (OPLL), Locking range, Injection synchronization, Laser phase noise.

1.0 Introduction

The annoying circuit component in optical phase lock loop is the loop propagation delay. The presence of this delay along with the finite line-width of the laser adds instability to the loop and manifests as a spurious locking. The loop appears to lock at a frequency that bears no obvious relation to the input frequency. We assume that the loop is operating in the unlocked mode. Under this condition, the instantaneous phase error will consist of three terms : i) dc voltage due to initial detuning, ii) a component at the modulating frequency and iii) random fluctuations due to the noise.

2.0 Theory

Let us assume that the incoming signal is $A\sin[w_i t + \alpha(t)]$ and the free running laser VCO output is $2\cos[w_2 t + \beta(t)]$, where $\alpha(t)$ and $\beta(t)$ are due to laser phase noise.

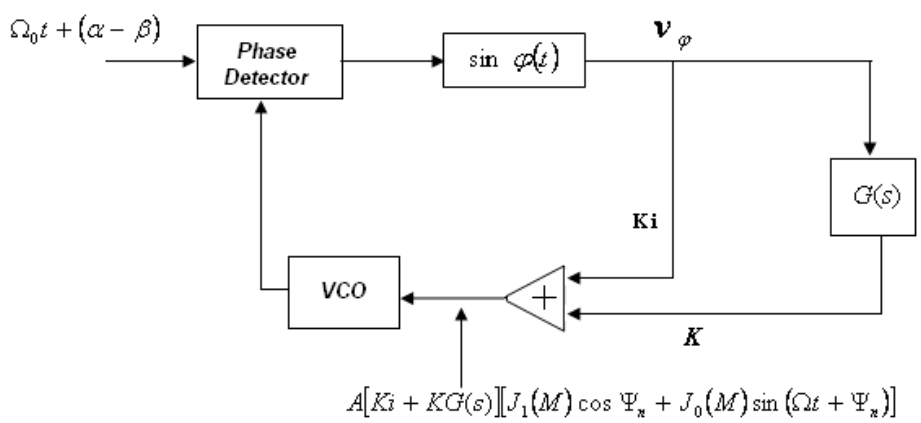

Fig.1 Injection synchronized OPLL

It can be shown that the governing equation of the homodyne OPLL is

$$\frac{d\phi_t(t)}{dt} = \Omega_0 - AKF(s)(1 + s\tau_p)\sin(\phi(t-\tau)) - AK_i \sin\phi(t) + \frac{d}{dt}(\alpha(t) - \beta(t)), \ldots\ldots\ldots \quad (1)$$

where $\Omega_0 = w_1 - w_2$ = open loop frequency error

AK = open loop gain

K_i = sensitivity of phase detector due to injection component

We assume a solution of equation (1) of the form given by $\phi = \phi_s + \phi_n$, ……..……. (2)

where ϕ_s is the steady state solution and ϕ_n is a random variable due to the incoming noise having zero mean. From equations (1) & (2)

$$\frac{d\phi_s}{dt} + \frac{d\phi_n}{dt} = \Omega_0 - \{AK_i + AK\,G(s)\}[\sin\phi_s \cos\phi_n + \cos\phi_s \sin\phi_n] + n_\phi(t) \quad \text{…….. (3)}$$

where $n_\phi(t) =$ laser phase noise component.

Thus using quasi-linearization technique in the locked state, one finds

$$\frac{d\phi_s}{dt} = \Omega_0 - \{AK_i + AK\,G(s)\}.e^{-\sigma_\phi^2/2} \sin\phi_s \quad \text{……..…….(4)}$$

$$\& \ \frac{d\phi_n}{dt} = -\{AK_i + AK\,G(s)\}(\cos\phi_s).\mathrm{G(s)}e^{-\sigma_\phi^2/2}\phi_n(t) + n_\phi(t) \quad \text{…….. (5)}$$

Now when the loop is beating, the output of the VCO can assumed as

$2\cos[(w_2 + \Delta\Omega)t - M\cos(\Omega t) + \beta(t)]$, where the closed loop frequency error is given by $\Omega = (w_1 - w_2) - \Delta\Omega = \Omega_0 - \Delta\Omega$.

Here $\Delta\Omega =$ frequency shift of the VCO

$M\cos(\Omega t) \rightarrow$ appears because of the fluctuating component

M is the input-output index error. In this case, it comprises of two parts: i) M_i due to injection component and ii) M_p due to the loop.

Ψ = phase angle introduced due to loop propagation delay and the phase modulator.

The phase detector output is $v_\phi(t) = A\sin[\Omega t + M\cos(\Omega t) + \Psi_n(t)]$…… (6)

If we assume the equivalent filter to be of the form $G(s) = (1 + s\tau_p)\left(\frac{1 + s\tau_1}{1 + s\tau_2}\right)e^{-s\tau}$,

where F_o = asymptotic gain of the filter = $\left(\frac{1 + s\tau_1}{1 + s\tau_2}\right)$

τ = loop delay time constant

τ_p = phase modulation time constant

$s = j\Omega$.

then the output of the filter is $v_f(t) = G(s).v_\phi(t)$

$$= \sqrt{1 + \Omega^2\tau_p^{\,2}}.F_0\, e^{-j[\Omega\tau - \tan^{-1}(\Omega\tau_p)]}.v_\phi(t) \quad \text{…… (7)}$$

It can be shown that $\Psi = (\Omega\tau - \tan^{-1}\Omega\tau_p)$ and thus equation (7) reduces to

$$v_f(t) = \sqrt{1 + \Omega^2\tau_p^{\,2}}.F_0\, e^{-j\Psi}v_\phi(t) \quad \text{…….. (8)}$$

Equation (6) further simplifies to

$$v_\phi(t) = A[\sin(\Omega t + \Psi_n)\cos\{M\cos(\Omega t)\} + \cos(\Omega t + \Psi_n)\sin\{M\cos(\Omega t)\}]$$

$$\cong A\,J_1(M)e^{-\sigma_\phi^2/2} + A\,J_0(M)e^{-\sigma_\phi^2/2}\sin(\Omega t) \quad \text{…….. (9)}$$

In deriving the above equation all the higher order terms are removed due to low-pass filtering.

Using equations (7), (8) and (9) we have

$$v_f(t) = \sqrt{1 + \Omega^2\tau_p^{\,2}}.F_0\, e^{-j\Psi}\{AK_i + AK\,G(s)\}[\,J_1(M)e^{-\sigma_\phi^2/2} + J_0(M)e^{-\sigma_\phi^2/2}\sin(\Omega t)] \quad \text{…. (10)}$$

Since the output of the filter modulates the instantaneous frequency of the VCO, we have

$$\Delta\Omega = A(K_i + K)J_1(M)e^{-\sigma_\phi^2/2} \quad \text{..... (11)}$$

$$\& \; M\,\Omega\sin(\Omega t) + \frac{d\Psi_n}{dt} = v_f(t)\Big|_{ac}$$

$$= A(K_i + KG(s))J_0(M)e^{-\sigma_\phi^2/2}.F_0\sqrt{1+\Omega^2\tau_p^{\,2}}\,\sin(\Omega t - \Psi) \quad \text{..... (12)}$$

This ac component will cause VCO phase modulation. If we ignore the noise modulation of VCO, then

$$M_i\Omega = AK_i e^{-\sigma_\phi^2/2}$$

$$M_p\Omega = AKG(s)e^{-\sigma_\phi^2/2}$$

and thus

$$M = \frac{A\left(K_i + K\sqrt{1+\Omega^2\tau_p^{\,2}}\,F_0\cos\Psi\right)}{\Omega}e^{-\sigma_\phi^2/2} \quad \text{..... (13)}$$

For small M, $J_1(M) \cong \frac{M}{2}$ and thus

$$V_f\Big|_{dc} = \left(\frac{A}{2}\right)\frac{e^{-\sigma_\phi^2}}{\left(\Omega/AK\right)}\left(1+\frac{Ki}{K}\right)\left[\frac{Ki}{K} + \sqrt{1+(\Omega\tau_p)^2}\,F_0\cos\Psi\right] \quad \text{..... (14)}$$

Similarly,

$$\Delta\Omega = \left(\frac{AK}{2}\right)\frac{e^{-\sigma_\phi^2}}{\left(\Omega/AK\right)}\left(1+\frac{Ki}{K}\right)\left[\frac{Ki}{K} + \sqrt{1+(\Omega\tau_p)^2}\,F_0\cos\Psi\right] \quad \text{..... (15)}$$

Since the beat error frequency is given by $\Omega = \Omega_0 - \Delta\Omega$, equation (15) reduces to

$$2\Omega^2 = 2\Omega\Omega_0 - (AK)^2 e^{-\sigma_\phi^2}\left(1+\frac{Ki}{K}\right)\left[\frac{Ki}{K} + \sqrt{1+(\Omega\tau_p)^2}\,F_0\cos\Psi\right] \quad \text{..... (16)}$$

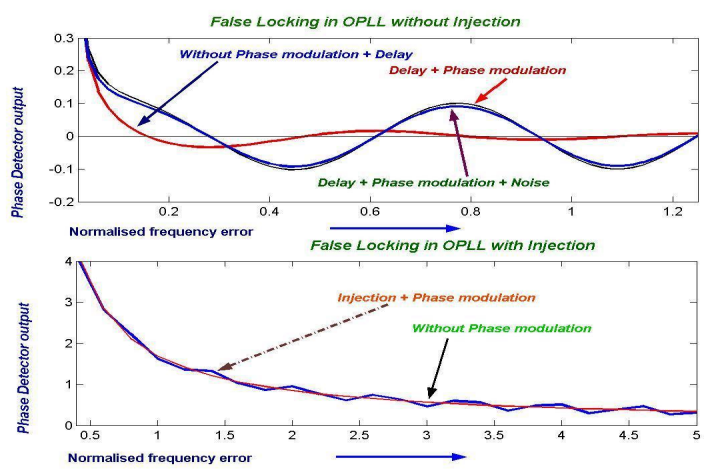

Fig. 2 False locking in OPLL

Fig.2 shows that false locking in a homodyne OPLL is eliminated due to the presence of injection.

2.0 Locking Range Calculation with Phase Modulation

We approximate $\cos[\Omega\tau - \tan^{-1}\Omega\tau_p]$ as $\dfrac{1-(\Omega\tau)^2 m}{\sqrt{1+(\Omega\tau_p)^2}}$, where $m = \left(\dfrac{1}{2} - \dfrac{\tau_p}{\tau}\right)$. Thus equation (15) reduces to $\Omega = \Omega_0 - \dfrac{(AK)^2}{2\Omega} e^{-\sigma_\phi^2}\left(1+\dfrac{Ki}{K}\right)\left[\left(\dfrac{Ki}{K}+F_0\right) - \left(F_0 m\tau^2\right)\Omega^2\right]$. To find the pull-in range, we equate $\dfrac{\partial\Omega}{\partial\Omega_0} = \infty$ and thus one obtain the pull-in range as

$$\frac{\Omega_0}{AK} = \sqrt{2\left(1+\frac{Ki}{K}\right)\left(\frac{Ki}{K}+F_0\right)} e^{-\sigma_\phi^2/2}\left[1 - 0.5(AK\tau)^2 mF_0\, e^{-\sigma_\phi^2}\left(1+\frac{Ki}{K}\right)\right]^{1/2} \quad \text{..... (17)}$$

Remembering that τ_p and τ are of the same order one obtains the pull-in range for $m \cong -\dfrac{1}{2}$ as

$$\frac{\Omega_0}{AK} = \sqrt{2\left(1+\frac{Ki}{K}\right)\left(\frac{Ki}{K}+F_0\right)} e^{-\sigma_\phi^2/2}\left[1 + 0.25(AK\tau)^2 F_0\, e^{-\sigma_\phi^2}\left(1+\frac{Ki}{K}\right)\right]^{1/2} \quad \text{..... (18)}$$

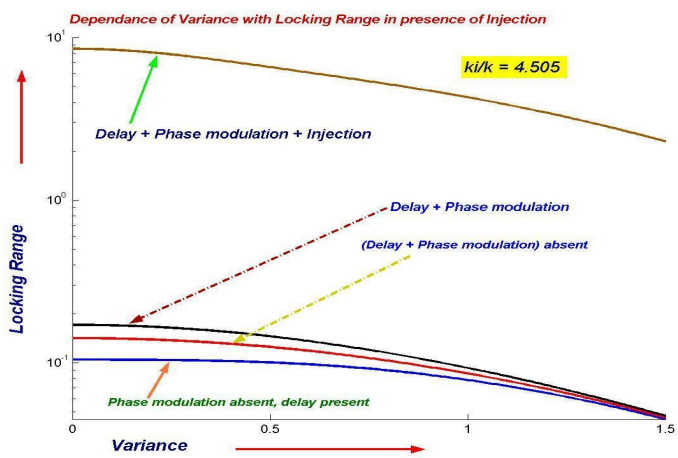

Fig. 3 Dependence of Locking Range with Variance in presence of Injection

The pull-in range should be as large as possible in order to improve the tracking capability. It can be easily seen from Fig.3 that injection improves the locking range of the homodyne OPLL in presence of loop propagation delay.

3.0 Conclusion

Referring to Fig.2 it is at once clear that the false locking is eliminated if injection is present in the loop. Moreover, in presence of injection, phase modulation does not play any role.

4.0 Acknowledgement

The authors are extremely grateful to Professor J. Banerjee, Chairman Academy of Technology for providing all assistance for carrying out this work.

5.0 References

1) B.N Biswas, *Phase lock theories & applications*, *Oxford and IBH New Delhi*, 1988.
2) F M Gardner, "Phase Locked Technique (5th Ed)" McGraw Hill, NY, 2005.
3) B.N Biswas, *et al*, On the combined use of Injection Locking and Optical Phase Locked loop, *IETE Journal of Research,* vol 47, Nos. 3&4, May-August 2001, pp 117-126.