# Design of Compact and Miniaturized Band-pass Filters in Coplanar Waveguide (CPW) Technology

***Philip Marraccini*[1], *Nader Behdad*[2]**

School of Electrical Engineering and Computer Science
University of Central Florida
4000 Central Florida Blvd, Orlando, FL 32816-2362, USA
email: philipmarraccini@ieee.org, behdad@mail.ucf.edu

## Abstract

A new technique for designing compact, band-pass filters of arbitrary orders is presented in this paper. The proposed approach is based on the design and optimization of a second order band-pass filter, which acts as the unit cell of a higher order filter. This unit cell is composed of slow-wave transmission line resonators, separated from one another by an inductive impedance inverter network. For applications requiring a narrow-band filter response, this unit cell is capacitively coupled to the outside world to increase the loaded quality factor of the resonators and achieve a narrower bandwidth. This mechanism provides a simple method of controlling the bandwidth and frequency response of the filter. Two different cascading topologies are used to achieve filters with either even (N = 2, 4, …) or arbitrary orders (N=2, 3, 4, …).

## 1. Introduction

Recent advancements in wireless communications in conjunction with the ever increasing demand for miniaturization and size reduction of various wireless systems and devices have led to numerous constraints on the size, weight, and power consumption of modern communications systems and devices. As a result, the miniaturization of many components in modern wireless systems has become a necessity. RF/Microwave filters, which are integral parts of any wireless communication system, are not exceptions to this rule. RF/Microwave filter miniaturization is especially critical in wideband software-redefined radio systems such as the Joint Tactical Radio System (JTRS) where the radios as well as their associated RF circuitry must be capable of operating over extremely wide bandwidths. Therefore, the miniaturization of RF/microwave filters has received significant attention of many recent studies [1-7].

In this paper, a new filter design technique is presented that can be used to design compact band-pass RF and microwave filters of arbitrary orders and factional bandwidths ranging from 1% to 60%. A simple design procedure is presented in this paper, which allows for the easy design and optimization of the frequency responses band-pass filters with arbitrary orders. The technique is based on the design and optimization of two second-order band-pass filters that act as the constituting unit cells of high-order filters. The two presented unit cells are optimized for narrow-band and wide-band applications. Once the basic unit cell is optimized, several identical unit cells are cascaded in either of the two forms presented in this paper to achieve either an even order filter (N = 4, 6, 8, … ) or an arbitrary order filter (N = 3, 4, 5, …). The principles of operation, the guidelines for designing the filter, as well as the simulation and measurement results of the proposed band-pass filter are presented in the following sections.

## 2. Filter Design and Principles of Operation

The unit cell of the proposed filter is shown in Figure 1(a). It is composed of two capacitors, $C$, which are separated from an inductor, $L$, with two short pieces of transmission lines with characteristic impedances of $Z_1$ and electrical lengths $\theta$. The capacitors, $C$, and transmission lines form slow-wave resonators. The two resonators are separated from one another using a simple inductive impedance inverter. The inductive impedance inverter is formed by the parallel inductor and two series transmission lines with negative electrical lengths, which are absorbed by the transmission lines on each side of it [*8*]. This forms a basic, compact, second-order band-pass filter. To achieve narrow-band operation, the basic unit cell shown in Figure 1(a) can be coupled to the feeding transmission lines using two series coupling capacitors, $C_c$, as shown in Figure 1(b). This filter has the same principles of operation as that shown in Figure 1(b), except for the series coupling capacitors which are used to control the external quality factor (Q) of the structure and hence its bandwidth.

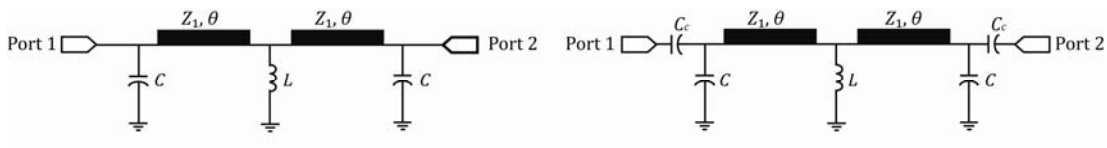


(a) (b)

Figure 1. The topology of the unit cells of the proposed filters. (a) Second order unit cell (b) Capacitively coupled unit cell.

The two circuits shown in Figure 1 act like simple second-order band-pass filters. If a higher-order response is desired, several identical unit cells can be cascaded. Figure 2(b) shows the topology of a higher-order band-pass filter composed of several unit cells of the filter shown in Figure 1(a). In this arrangement, no impedance inverter is used between the adjacent stages. Therefore, if a total of M unit cells are cascaded, a band-pass filter of order M+1 is achieved. Figure 2(b) shows the cascading topology used for the narrow-band filters, where an impedance inverter network is used between two subsequent stages. This way, using M unit cells, a filter of order 2M can be achieved.

## 3. Filter Implementation and Measurement Results

The basic filter topologies shown in Figures 1 and 2 can be implemented using a variety of methods ranging from using lumped elements at low frequencies to using distributed or semi-lumped elements at higher frequencies. In this case it was decided to use Coplanar Waveguide Technology (CPW) to simplify the filter fabrication. Fabrications are performed using standard lithography techniques, where structures with minimum features of 100 µm can be fabricated on standard microwave laminates.

### 3.1 Wideband Filter Prototypes

A prototype of a wideband filter similar to the one shown in Figure 1(a) is designed and its performance is optimized. The corresponding values of the lumped element model of this filter are presented in Table 1. The filter is implemented in CPW technology, where the capacitors are implemented using interdigital planar capacitors and the inductors are implemented using short circuited transmission lines. The filter response was simulated using full-wave simulations in Zeland's IE3D, which is a commercially available EM simulator based on the method of moments (MoM). A prototype of this filter was fabricated on .635 mm thick RO3210™ substrate with a dielectric constant of $\varepsilon_r$=10.2, loss tangent of tan(δ)=0.0027, and a copper cladding thickness of 17µm. The frequency response of the fabricated filter is then measured using a calibrated vector network analyzer. The measured and simulated frequency responses of this filter are shown and compared in Figure 3. As observed from this figure, the filter has a bandwidth of 96% and an insertion loss of .25 dB. The discrepancies observed between the measured and simulated results can be attributed to the inaccuracies in the fabrication process as well as numerical errors in the simulation.

To demonstrate the cascading procedure displayed Figure 2(a), a third order band-pass filter composed of two identical unit cells of this filter was designed, simulated, and fabricated. The corresponding lumped

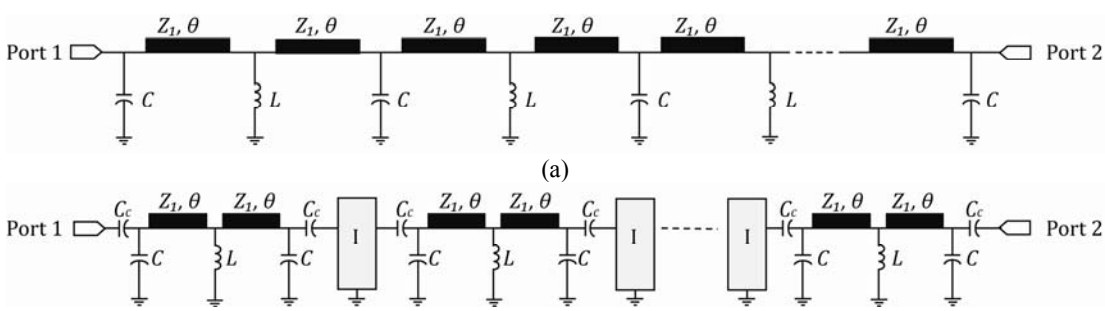


(a)

(b)

Figure 2. The unit cells are cascaded to obtain higher order band-pass filters. (a) The unit cell of Figure 1(a) can be combined to obtain high-order filters of order M+1, where M is the number of unit cells. (b) The capactively coupled unit cells are separated by impedance inverters to obtain even order filters. (N = 4, 6, 8, …)

element values of this filter are displayed in Table 1. As seen in Table 1 the inductors and capacitors have the same values as those of the unit cell. As for the middle capacitor, it is approximately 2*C*. This filter was fabricated on the same substrate as its unit cell and its frequency response is measured using a two-port calibrated VNA. The measurement and simulated frequency responses of this filter are presented in Figure 4. As observed, the filter has a bandwidth of 66% and an insertion loss of .36 dB, and a third-order band-pass response as expected. As can be seen from the results of Figure 3 and 4 the third order has a fractional bandwidth of 67% whereas the second order filter has a 96% bandwidth.

**TABLE 1**
EQUIVALENT CIRCUIT ELEMENT VALUES OF THE SECOND ORDER UNIT CELL AND ITS CORRESPONDING THIRD ORDER FILTER

| | **Unit Cell** | | | **Third Order Filter** | | |
|---|---|---|---|---|---|---|
| **Parameter** | $Z_1$ | $\theta$ **at** $f_0$ | $Z_0$ | $Z_1$ | $\theta_1$ **at** $f_0$ | $\theta_2$ **at** $f_0$ |
| **Value** | 50 Ω | 6.8° | 50 Ω | 50 Ω | 4.2° | 4.4° |
| **Parameter** | | | | $Z_0$ | | |
| **Value** | | | | 50 Ω | | |

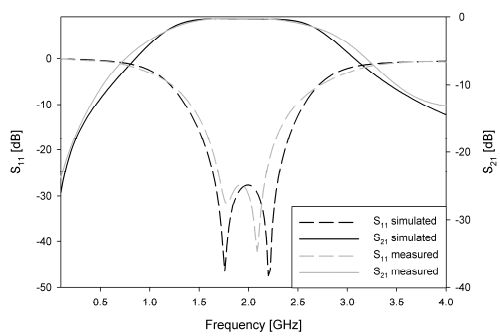


Figure 3. Simulated and measured response of second order band-pass filter prototype.

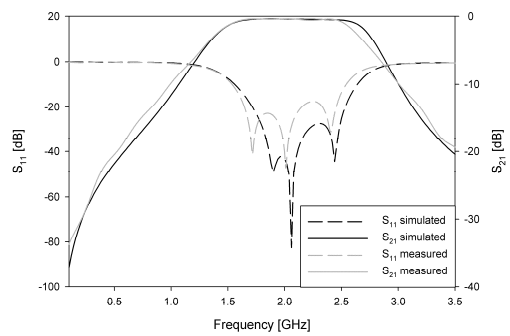


Figure 4. Simulated and measured response of third order band-pass filter prototype.

## 3.2 Narrow-Band Filter Prototypes

As discussed in the previous section, the topology presented in Figure 1(b) can be used to design relatively narrow-band filters. To demonstrate this, a basic filter prototype with equivalent circuit parameter values shown in Table 2 is designed and its frequency response is optimized. Similar to the previous case, this new filter prototype is also implemented in CPW technology, where all capacitors are implemented in simple interdigital form and the inductors are fabricated using short circuited transmission lines as before. A prototype of this filter was fabricated on a 0.5 mm thick RT/Duroid 5880™ (from Rogers Corp.) a dielectric constant of $\varepsilon_r$=2.2, loss tangent of tan(δ)=0.0009, and copper thickness of 17μm. The simulated and measured frequency responses of this filter are shown in Figure 5. As observed from this figure, the filter has a fractional bandwidth of 1.7% and a measured insertion loss of 2.9 dB. It is well known that for a given resonator, Q used in a filter, its bandwidth and insertion loss are inversely proportional to each other [*9*]. Furthermore, increasing the order of the filter also increases its insertion loss for a given resonator Q. This explains the rather large observed measured insertion loss of the filter.

To demonstrate the cascading scheme of Figure 2(b), a fourth order filter composed of two identical second-order unit cells was designed and optimized. The equivalent circuit parameter values of the unit cell of this filter are shown in Table 3. In this design, a simple transmission line impedance inverter is used between the two identical unit cells. A prototype of this filter was fabricated on a 0.5 mm thick RO4003C™ dielectric substrate from Rogers Corp. The substrate has a dielectric constant of $\varepsilon_r$=3.4, loss tangent of tan(δ) = 0.0027, and metal thickness of 18μm. The frequency response of the filter is measured and is presented in Figure 6 along with the simulated response obtained from ful-wave EM simulations. As observed, a fourth order response with

a center frequency of 1.75GHz, a factional bandwidth of 7%, and a measured insertion loss of 2.0 dB are obtained. The measurements performed over a wider frequency band show that this fourth order band-pass filter has harmonic suppression capability with an attenuation greater than 40 dB at $2f_0$ and $3f_0$ and an attenuation better than 25 dB at $4f_0$..

**TABLE 2**

EQUIVALENT CIRCUIT ELEMENT VALUES OF A BAND-PASS FILTER PROTOTYPE WITH A 1.7% FRACTIONAL BANDWIDTH

| **Parameter** | $Z_1$ | $\theta$ **at** $f_0$ | $Z_0$ |
|---|---|---|---|
| **Value** | 137 Ω | 17° | 50 Ω |
| **Parameter** | $L$ | $C$ | $C_c$ |
| **Value** | 44 pH | 1.2 pF | .2 pF |

**TABLE 3**

EQUIVALENT CIRCUIT ELEMENT VALUES OF A BAND-PASS FILTER PROTOTYPE WITH A 7% FRACTIONAL BANDWIDTH

| **Parameter** | $Z_1$ | $\theta$ **at** $f_0$ | $Z_0$ |
|---|---|---|---|
| **Value** | 122 Ω | 18.8° | 50 Ω |
| **Parameter** | $L$ | $C$ | $C_c$ |
| **Value** | .19 pH | 1.56 pF | .48 pF |

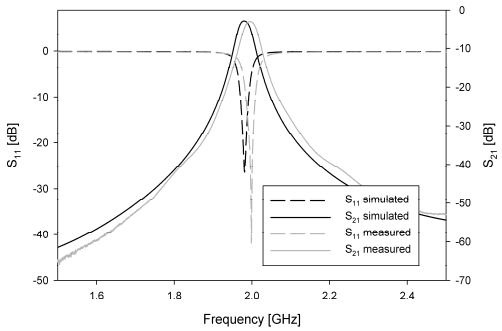


Figure 5. Simulated and measured response of band-pass filter prototype with 1.7% fractional bandwidth.

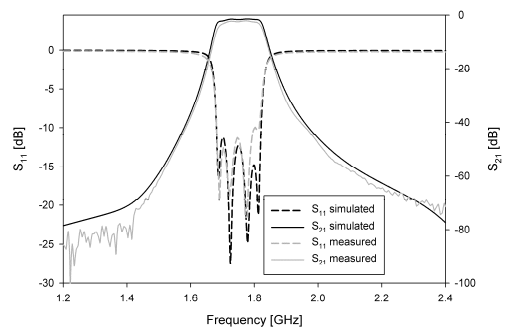


Figure 6. Simulated and measured response of band-pass filter prototype with 7% fractional bandwidth.

## 4. Conclusion

In this paper, a new filter topology for designing compact band-pass filters was presented and discussed. The filter topology presented here is suitable for designing planar band-pass filters with fractional bandwidths ranging from 2% to 60%. The design of higher order filters is also simplified by designing the basic constituting unit cells, optimizing their performances, and using simple cascading schemes to obtain higher order band-pass responses. Several filter prototypes of varying orders and bandwidths were presented to demonstrate the proposed design guidelines and verify the principles of operation of this topology.

## 5. References


1. F. Aryanfar and K. Sarabandi, "Compact millimeter-wave filters using distributed capacitively loaded CPW resonators," *IEEE Trans. Microwave Theory & Techn.*, vol. 54, March 2006, pp. 1161-1165.
2. Abbaspour-Tamijani, L. Dussopt, and G.M. Rebeiz,, "Miniature and tunable filters using MEMS capacitors" *IEEE Tran. Microwave Theory & Tech.*, vol. 51, July 2003, pp. 1878-1885.
3. R. Azadegan and K. Sarabandi, "Miniature high-Q double-spiral slot-line resonator filters," *IEEE Trans. Microwave Theorey & Techn.*, vol. 52, May 2004, pp. 1548-1557.
4. J. Lee and K. Sarabandi, "Miniaturized conductor-backed slot-line resonator filter with two transmission zeros," *IEEE Microwave and Wireless Components Letters*, vol. 16, no. 12, Dec. 2006, pp. 660-662.
5. W. Menzel, Lei Zhu, Ke Wu, Frank Bögelsack (2003), "On the Design of Novel Compact Broad-Band Planar Filters," *IEEE Microwave and Wireless Components Letters*, vol. *51*, no. 2, Feb. 2003, pp. 364 – 369.
6. H. Wu, H. Yang, C. Peng, and C. Tzuang, "Miniaturized microwave passive filter incorporating multilayer synthetic quasi-TEM transmission line," *IEEE Trans. Microwave Theorey & Techn.*, vol. 53, Sep. 2005, pp. 2713-2720.
7. W. Tu and K. Chang, "Miniaturized dual-mode bandpass filter with harmonic control," *IEEE Microwave and Wireless Components Letters*, vol. 15, no. 12, Dec. 2005, pp. 838 – 840.
8. G. Matthaei, E.M.T. Jones, and L. Young, *Microwave Filters, Impedance-Matching Networks, and Coupling Structures*, Norwood, MA, Artech House, 1980.
9. I. Hunter, R. Ranson, A. Guyette, and A. Abunjaileh, "Microwave Filter Design from a Systems Perspective," IEEE Microwave Magazine, vol. 8, Oct. 2007, pp. 71-77.