Performance Analysis of the Energy Detection Based ToA Estimator for MB-OFDM UWB

Huilin Xu, Liuqing Yang

Dept. of ECE, Univ. of Florida, P.O.Box 116130, Gainesville, FL 32611
Emails: xuhl@ufl.edu, lqyang@ece.ufl.edu

Abstract

The Cramer-Rao Bound (CRB) analysis shows that ultra-wideband (UWB) technique can provide precise timing and positioning, thanks to its huge bandwidth. In this paper, we apply the UWB signal for the energy detection based time-of-arrival (ToA) estimation. We analyze the mistiming performance of the ToA estimator in a general Nakagami-*m* channel. Analysis shows that the slope of the probability of mistiming curve increases as the number of subbands increases. This is known in communications as *diversity*. Simulations are also carried out to corroborate our theoretical analysis.

1. Introduction

For ToA estimation, the Cramer-Rao Bound (CRB) analysis confirms that the ultra-wideband (UWB) signal is expected to provide orders of magnitude improvement on the localization precision compared to conventional narrowband signals. Multi-band (MB-) OFDM UWB signal consists of several subbands each of which only contains part of the channel information. These subband signals need to be combined at the receiver side to obtain the full knowledge of the channel. In this paper, the channel impulse response (CIR) is recovered for each subband and all CIR estimates are simply averaged in time domain. Then, the time-of-arrival (ToA) is estimated by energy detection. We will prove that the mistiming performance can be improved with MB signals by exploiting the diversity across subbands.

Notation: We will use bold upper and lower cases to denote matrices and column vectors, respectively. We will use $(\ )^T$ and $(\ )^H$ for transpose and conjugated transpose of matrices and vectors, and $(\ )^*$ for conjugate of complex numbers.

2. System Model

The architectures of the MB-OFDM transmitter and receiver are illustrated in Fig. 1 (a) and (b), respectively [1]. Different from the basic OFDM system, for MB-OFDM, the baseband signal is carrier modulated on one of the frequency bands at the transmitter according to the frequency hopping pattern, and the received waveform is carrier demodulated accordingly at the receiver. Assume that a total of B frequency subbands $[\omega_{1,1}, \omega_{1,N_1}]$, …, $[\omega_{B,1}, \omega_{B,N_B}]$ are used, where $\omega_{b,k}$ is the k th subcarrier on the b th subband, $k \in [1, N_b]$, $b \in [1, B]$.

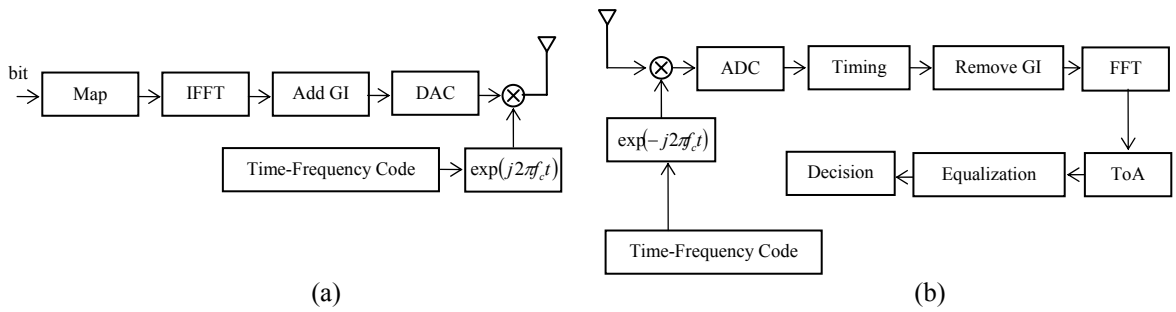

Fig. 1 MB-OFDM transmitter block diagram (a) Transmitter; (b) Receiver.

The transmitted waveform propagates through the channel $h(t)=\sum_{l=1}^{L} h_l \cdot \delta(t-\tau_l)$, where $\{h_l\}_{l=1}^{L}$ and $\{\tau_l\}_{l=1}^{L}$ are amplitudes and delays of the L channel paths, respectively. The frequency domain signal received on the kth subcarrier can be expressed as $R(b,k)=S(b,k)H(b,k)+W(b,k)$, where $S(b,k)$ is the signal transmitted on the kth subcarrier, $k \in [1,N_b]$, of the b th subband, $b \in [1,B]$. $W(b,k)$ is the white Gaussian noise (AWGN), and $H(b,k)$ is the channel Fourier transform coefficient $H(b,k)=\sum_{l=1}^{L} h_l \cdot \exp(-j\omega_{b,k}\tau_l), k \in [1,N_b], b \in [1,B]$. The least squares (LS) estimate of the channel frequency response is given by

$$\hat{H}(b,k)=H(b,k)+N(b,k),\ k \in [1,N_b],\ b \in [1,B] \tag{1}$$

where $N(b,k)=W(b,k)S^*(b,k)/|S(b,k)|^2, k \in [1,N_b], b \in [1,B$ is the noise term.

3. Energy Detection Based ToA Estimator

Let us now consider a simple ToA estimator based on energy detection for an MB-OFDM system with B subbands. In order to make the problem analytically tractable, we will use a discrete-time channel model similar to the one used in [2] but with more general statistical characteristics. For the b th subband, $b \in [1,B]$, we assume that the channel is modeled by L equally-spaced taps, $\{h_{b,l}\}_{l=1}^{L}$. The tap spacing is equal to the sampling interval of the receiver and there is no missampling. The tap number L is known at the receiver. In [2], the following assumptions are made: 1) the channel paths are independent within each subband; 2) the channel is uncorrelated over all B subbands; 3) the channel paths are Gaussian random variables, and the channel has a uniform power delay profile (PDP). In this paper, we will consider the correlation among channel paths both inside each subband and over all subbands. In addition, we will generalize the complex Gaussian distribution of channel paths to Nakagami-*m* distribution with an arbitrary PDP. The coherent receiver with maximum ratio combining (MRC) for Nakagami-*m* channel was introduced in [3]. However, our analysis is based on the noncoherent reception.

Upon the reception of the MB-OFDM UWB signal, a DFT-based channel estimator will yield the CIR estimate $\{\bar{h}_{b,n}\}_{n=1}^{L+2L_1}$. Following the derivation in the literature (see, e.g., [2]), we have the channel estimate for the b th subband as:

$$\bar{h}_{b,n}=\begin{cases} h_{b,n-L_1}+\eta_{b,n},\ n \in [L_1+1, L_1+L] \\ \eta_{b,n},\ \text{else} \end{cases},\ b \in [1,B] \tag{2}$$

where the timing error after the coarse synchronization is in the range of $\pm L_1$ taps. When channel information is not available at the receiver, a simple energy detection based synchronizer can be utilized to find the start of the channel. In particular, for a single band, this estimator detects the start of the channel by seeking the maximum total energy of a length L segment in the estimated channel sequence given by (2). With the availability of multiple subbands, this ToA estimator simply combines the energy from all subbands. Then, the index of the first channel path can be estimated by

$$\bar{k}=\arg\max_{m}\left(\sum_{b=1}^{B}\sum_{n=m}^{m+L-1}\bar{h}_{b,n}^2\right). \tag{3}$$

According to the synchronization criterion (3), mistiming by one tap happens when the following inequality holds $\sum_{b=1}^{B}\sum_{n=L_1+2}^{L_1+L+1}|\bar{h}_{b,n}|^2 > \sum_{b=1}^{B}\sum_{n=L_1+1}^{L_1+L}|\bar{h}_{b,n}|^2$. After the common terms are canceled, this inequality becomes

$$\sum_{b=1}^{B}|\eta_{b,L_1+L+1}|^2 > \sum_{b=1}^{B}|\bar{h}_{b,1}+\eta_{b,L_1+1}|^2. \tag{4}$$

In the rest of this section, we will derive the probability that (4) happens. The noise $\eta_{b,n}$ is independent zero mean circularly symmetric complex Gaussian (ZMCSCG) distributed.

Let $v=\sum_{b=1}^{B}\left|h_{b,1}+\eta_{L_1+1}\right|^2$ and $y=\sum_{b=1}^{B}\eta_{L_1+L+1}^2$. The mistiming probability can be expressed as

$$P_1=\int_0^{\infty} f_V(v)dv\int_v^{\infty} f_Y(y)dy. \tag{5}$$

Without loss of generality, we assume that the variance of the noise is 1. The random variable y then has a Chi-square distribution with the probability density function (PDF) $f_Y(y) = 1/(B-1)!\,y^{B-1}\exp(-y)$. Using the result in [4], we have the mistiming probability $P_1 = \sum_{n=0}^{B-1} 1/n! \int_0^\infty f_V(v) v^n \exp(-v) dv$. Given $\{h_{b,1}\}_{b=1}^B$, the random variable v obeys a noncentral Chi-square distribution with PDF

$$f_V(v;\lambda) = (v/\lambda)^{(B-1)/2} \exp(-(v+\lambda)) I_{B-1}(2\sqrt{v\lambda}), \tag{6}$$

where $\lambda = \sum_{b=1}^B |h_{b,1}|^2$ and $I_a(x)$ is the modified Bessel function of the first kind. From its moment generating function (MGF), the Laplace transform of $f_V(v;\lambda)$ can be expressed as $F_V(s) = \exp(-s\lambda/(1+s))/(1+s)^B$. The probability of mistiming can then be simplified using Eq. (6) and the property that the Laplace transform of $v^n f_V(v;\lambda)$ is $(-1)^n F_V^{(n)}(s)$. Considering the particular form of $F_V(s)$, we can expand $F_V^{(n)}(s)$ as $F_V^{(n)}(s) = \exp(-s\lambda/(1+s)) \sum_{l=0}^n \lambda^l f_{n,l}(s)$, where $f_{n,l}(s)$ is a function of s. Given λ, we have the mistiming probability

$$P_1(\lambda) = \sum_{n=0}^{B-1} (-1)^n / n! F_V^{(n)}(1) = \exp(-\lambda/2) \sum_{l=0}^{B-1} c_l \lambda^l \tag{7}$$

where $c_l = \sum_{n=l}^{B-1} (-1)^2 / n! f_{n,l}(1)$.

The mistiming probability P_1 is the statistical expectation of $P_1(\lambda)$, $P_1 = \int_0^\infty f_\Lambda(\lambda) P_1(\lambda) d\lambda$, where $f_\Lambda(\lambda)$ is the PDF of the random variable λ. Assume that the channel taps undergo Nakagami-*m* fading with PDF

$$f(\gamma_{b,n}; m) = \frac{m^m \gamma_{b,n}^{m-1}}{(A_{b,n}\bar{\gamma})^m \Gamma(m)} \exp\left(-\frac{m\gamma_{b,n}}{A_{b,n}\bar{\gamma}}\right), \tag{8}$$

where $\gamma_{b,n} = |h_{b,n}|^2, b \in [1,B], n \in [1,L]$, $A_{b,n}$ represents the PDP of the CIR in the b th frequency band, $\bar{\gamma}$ is the average SNR and $\Gamma(x)$ is the Gamma function.

For correlated Nakagami-*m* distributed random variables $\{\gamma_{b,1}\}_{b=1}^B$, there is not a simple form PDF for $\lambda = \sum_{b=1}^B \gamma_{b,1}$, but the Laplace transform of λ was found in [5]. At high SNR as $\gamma \to \infty$, the Laplace transform $F_\Lambda(s)$ can be approximated by

$$F_\Lambda(s) \approx d \prod_{b=1}^B (sA_{b,1}\bar{\gamma}/m)^{-m}, \tag{9}$$

where d is a constant term which is a function of the power correlation between $\gamma_{i,1}$ and $\gamma_{j,1}, i,j \in [1,B]$. Using the property of Laplace transform, we can obtain the average mistiming probability P_1 from (7) and (8), which is expressed by $P_1 = \sum_{l=0}^{B-1} (-1)^l c_l F_\Lambda^{(l)}(1/2)$. Then P_1 can be approximated at high SNR by

$$P_1 = C_1 (\bar{\gamma})^{-mB}, \tag{10}$$

where $P_1 = d(2m)^{mB} \prod_{b=1}^B A_{b,1}^{-m} \sum_{l=0}^{B-1} c_l (-2)^l (mB)!/(mB-l)!$. Similar to the derivation of P_1, the probability of mistiming by choosing $(l+n)$ as the index of the first tap of the channel given the true ToA is l is given by $P_n = C_n (\bar{\gamma})^{-|n|mB}, n \in [-L_1, L_1]$. As mentioned previously, $-L_1$ and L_1 represent the maximum timing ambiguity after the coarse timing.

From the union bound, we have the probability of mistiming

$$P_{mt} < \sum_{n=1}^{L_1} (C_n + C_{-n})(\bar{\gamma})^{-nmB}. \tag{11}$$

When the SNR $\bar{\gamma}$ is high, the right hand side of (11) approximates $(C_1 + C_{-1})(\bar{\gamma})^{-mB}$. This implies that the diversity gain of the estimator is $G_d = mB$ which increases as the subband number increases. By using B subbands, the energy detection based ToA estimator can achieve a higher diversity gain than the single band transmission.

4. Simulations

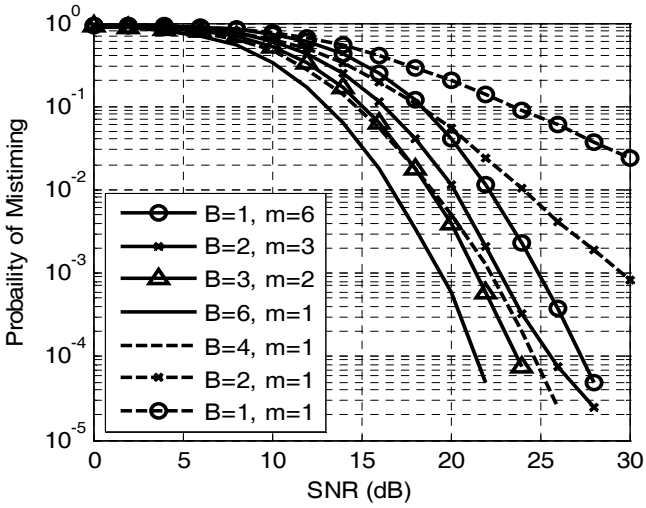

Fig. 2. The probability of mistiming with energy detection.

In our simulations, the channel has $L = 12$ independent paths. The channel has a uniform PDP. The total energy of the CIR is normalized. Fig. 2 shows the probability of mistiming for the ToA estimator when the channel is independent for different subbands. The residual timing error after the initial coarse synchronization is in the range of ± 6 taps. In our theoretical analysis, we have proved that by using B subbands, we can achieve a diversity gain of mB in the Nakagami-m channel. This is verified by our simulation results. In Fig. 2, curves with the same mB are parallel to each other and those with larger mB are steeper. Given the Nakagami parameter (m = 1), the larger the subband number B, the larger the diversity gain is, which means that the diversity gain of the scheme increases when more subbands are available. It should also be noted that given mB, the parallel curves have different horizontal shifts. Following the concept used by communications, we call this shift the coding gain of the probability of mistiming curves. Although we do not investigate the coding gain in this paper, it is not hard to understand that a higher coding gain can be obtained when more signal energy is collected from more subbands.

5. Conclusions

In this paper, we analyze the probability of mistiming performance for an energy detection based ToA estimator for MB-OFDM UWB systems in Nakagami-m channels. Theoretical analysis shows that a higher diversity gain can be achieved by using multiple subbands. Simulations are also carried out to corroborate our theoretical analysis.

6. Acknowledgments

This work is supported by the Office of Naval Research under Grant N00014-07-1-0868.

7. References

[1]. ECMA-368: High rate ultra wideband PHY and MAC standard, 1st edition, December 2005.

[2]. C. R. Berger, Z. Tian, P. Willett and S. Zhou, "Precise timing for multiband OFDM in a UWB system," *ICUWB 2006*, Waltham, MA, pp. 269-274, 24-26 September 2006.

[3]. Z. Wang and G. B. Giannakis, "A simple and general parameterization quantifying performance in fading channels," *IEEE Trans. on Communications*, vol. 51, no. 8, pp. 1389–1398, August 2003.

[4]. J. N. Pierce, "Theoretical diversity improvement in frequency-shift keying," *Proc. IRE*, vol. 46, no. 5, pp. 903–910, May 1958.

[5]. Y.-C. Ko, M.-S. Alouini, and M. K. Simon, "Outage probability of diversity systems over generalized fading channels," *IEEE Trans. on Communications*, vol. 48, no. 11, pp. 1783–1787, November 2000.