Cavity antenna with partly transparent aperture for two polarizations

N.I.Voytovich[1,2], A.V.Ershov[1], N.N.Repin[2], A.N.Sokolov[3]

[1]Design and Production of Radioequipment sub-faculty, Southern Ural State University,
76 Lenin Avenue, Chelyabinsk, 454080, Russia; e-mail: vni@nexcom.surnet.ru

[2]Nauchno-Issledovatelsky Institut po Izmeritelnoi Tekhnike, Open Corporation,
4 Vitebskaya Str., Chelyabinsk, 454080, Russia; e-mail: rnn17@mail.ru

[3]Radiophysics and electronics sub-faculty, Chelyabinsk State University,
129 Brat'ya Kashiriny Str., Chelyabinsk, 454021, Russia; e-mail: sokolov@csu.ru

Cavity antennas with partly transparent aperture are known a long time ago. Development of high-speed wireless communication systems stimulates the interest in the plane antennas with partly transparent aperture which have several input. Circularly-polarized plane antennas for two the polarization are presented in the paper.

Physical, mathematical, numerical and computational models of Cavity antenna with partly transparent aperture are presented in the paper. Antenna is an open rectangular metal resonant cavity 2 the height H of which is close to half wavelength λ and laterals dimensions a_2 and b_2 are several λ. The resonator upper wide wall of thickness D has a system K_0 rectangular radiating openings 5 with dimensions l_p x t_p (p=1,…, K_0) and separates the antenna from half space 3 by which an environment external to the antenna is simulated. Cavity antenna is excited by a screened stripline through coupling openings 4 with dimensions l_0 x t_0 in the low wall of thickness d. Region 1 bounded by the stripline screens is considered as a transmission resonator with dimensions a_1 x b_1 x h, the height of which h is considerably less than λ. Metal pins are arranged around the coupling opening 4 and close the stripline screens. (Metal pins and feeder radio path are not shown at the picture).

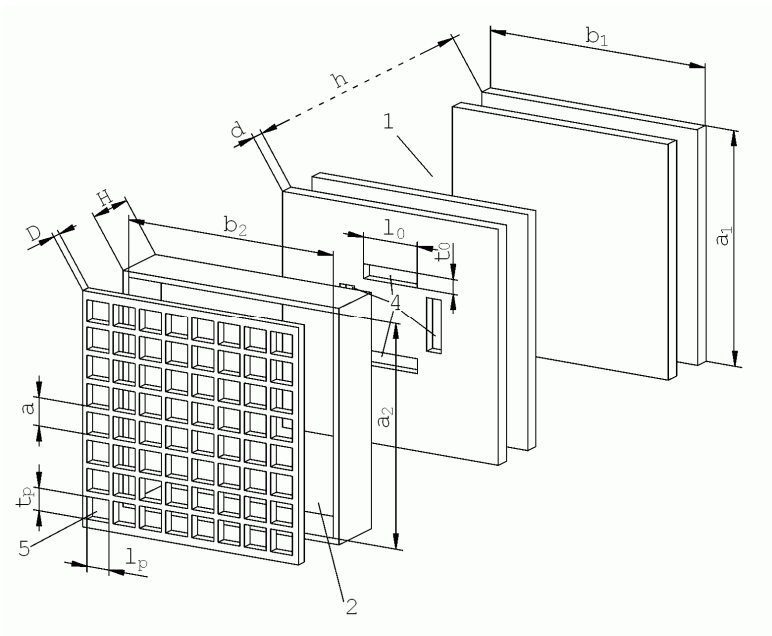

Fig. 1. Structure of cavity antenna.

The antenna physical model supposes that the antenna has five areas 1-5 bounded by perfectly conducting resonator walls and opening apertures. General electrodynamics problem is formed for the above regions electromagnetically coupled through opening apertures within the scope of the antenna physical model. The method of equivalent currents is used for the problem definition.

The system of integral equations is received relative to unknown distributions of electric currents on the strip, the pins and the magnetic currents on apertures of the coupling opening and radiating ones. For electric and magnetic field computation Green tensor function method is used. Galerkin method is used for solving the integral equation system. As a result antenna numerical model is received.

Antenna pattern and magnitude-phase distribution of magnetic field on cavity antenna radiating openings are computed for the antenna excited by four coupling openings. The relationship of antenna directivity frequency characteristic and dimensions l_p x t_p ($p=1,\ldots, K_0$) and radiating openings array as well as a number of radiating openings K_0 in the cavity antenna aperture are discussed in the paper. The measured and computed radiation patterns, directivity, return loss, half-power beamwidths and efficiencies of the antenna prototypes will be presented.

1. N.I.Voytovich, A.V.Ershov, N.N.Repin, A.N.Sokolov, “Cavity antenna with partly transparent aperture for wireless communications”, Progress in Electromagnetics Research Symposium – Tokyo, August 2006.