An accurate model for the analysis of the electromagnetic propagation from underground pipes to the surface

***B. Fiorelli*, R. Stefanelli, D. Trinchero**
iXem Labs - Dipartimento di Elettronica, Politecnico di Torino
c.so Duca degli Abruzzi 24, 10129 Torino (Italy)

info@ixem.polito.it

Abstract

Breaks and fractures in water distribution networks represent a problem of growing interest. Some authors are analysing the possibility of using wireless sensor networks to monitor water leakage in underground pipes. The present work provides an extensive analytical formulation for the characterisation of radio-frequency electromagnetic field propagation from the inner part of the tube to the ground surface, taking into account the electromagnetic properties of liquid, pipe and terrain.

1 Introduction

Determining the location of breakes and fractures in water or gas distribution networks is, still nowadays, a difficult task. The reasons are mainly due to the large size of the networks and to the difficulty to identify leakages not directly related to major interruptions, or to a substantial decrease in the stream flow. Furthermore, in many cases, the exact path of underground pipes is not known with sufficient accuracy, resulting in the need of complex and expensive exploratory surveys. In this context, the problem of water leakage from pipes represent a crucial task for fluid network management, expecially when the demand of water per-capita is steadily increasing, being of economical relevance for local communities.

For this reason many solutions have been developed to monitor the fluid leakage, introducing an acoustic sensor in the tube and analysing the frequency response from the surface. Normally the sensors are wired to fixed listening station located at the pipe terminal [1]. Since this procedure needs to keep a physical connection between the sensor and the surface, it cannot be used to monitor leakage over a long distance. On the other hand, some authors are investigating the possibility to transmit the information from inside the ground to the surface by wireless connections [2].

Starting from this concept, we have introduced and patented a solution that integrates the wireless transmitter and the sensor in a device capable to move with the fluid inside the pipe, independently from the need of wires,but permanently connected, by means of a radio link, to the listening station on the ground surface[3].

The solution is promising, but requires a rigorous approach to evaluate electromagnetic field propagation from the trasmitter inside the pipe to the ground surface, taking into account coupling and attenuation effects due to the fluid, pipe's thickness and pipe depth in the ground. With this aim, a deterministic method for the analysis of the field propagation based an integral solution of Maxwell equations is introduced.

2 Electromagnetic model

The solution we have identified introduces a magnetic source inside the water, in a general pipe (also metallic). For this application an exact solution of Maxwell's equations in a tridimensional domain is required. Unfortunately, the complexity of the problem needs a far too large number of unknown variables. Therefore, we need to introduce a geometrical model, with suitable symmetries, that relies on simplified approximations.

Under the assumption that pipes have an homogeneous transverse section and lie down parallel to the ground, it makes sense to introduce a model based on cylindrical symmetry, shown in Fig.1, with the goal of describing the propagation on transverse section with respect to the pipe's axis, namely the z one. In this configuration, boundary conditions on the discontinuity surfaces both for the pipe and ground stratifications are indipendent of z.

Consistently with the symmetry of the problem, our model introduces a source uniformly distributed along the axis of the pipe, in order to get rid of a z coordinate dependence. As a consequence, since boundary conditions and sources are indipendent of the z axis, the unknown fields propagate only on trasversal planes. This last assumption does not represent a limitation, at least when the field is calculated

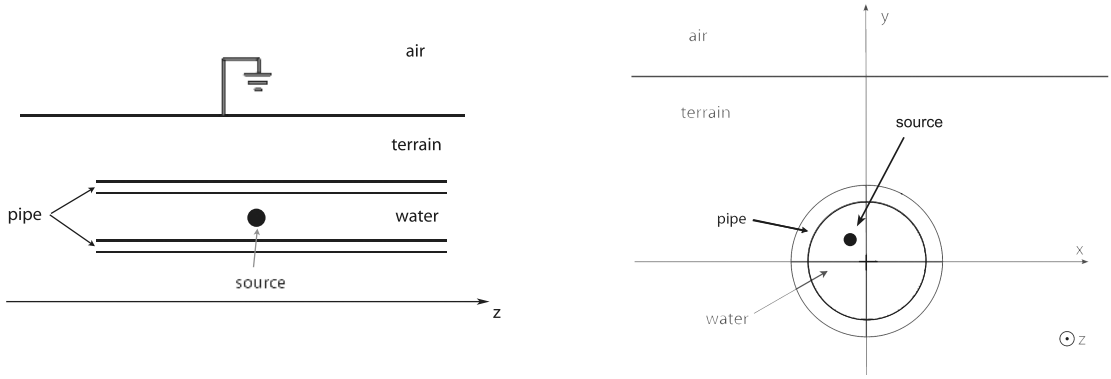

Figure 1: Simplified geometrical model.

in the trasversal plane that contains the sensor. Furthermore, it allows for the electromagnetic fields to be evaluated in the trasversal plane, prompting for an estimate of their variation as a function of the distance of the source along the plane of the ground.

The chosen, simplified, framework allows to describe the system as a collection of stratified discontinuities that can be analysed in a two dimensional system.

3 Propagation solution

In a general homogeneous medium the electromagnetic field can be expressed as [4]:

$$\underline{E}(\underline{r}) = \int \underline{\underline{G}}_{ee}(\underline{r}-\underline{r}') \cdot \underline{J}_e(\underline{r}')d\underline{r}' + \int \underline{\underline{G}}_{em}(\underline{r}-\underline{r}') \cdot \underline{J}_m(\underline{r}')d\underline{r}' = \underline{\underline{G}}_{ee} * \underline{J}_e + \underline{\underline{G}}_{em} * \underline{J}_m \tag{1}$$

$$\underline{H}(\underline{r}) = \int \underline{\underline{G}}_{me}(\underline{r}-\underline{r}') \cdot \underline{J}_e(\underline{r}')d\underline{r}' + \int \underline{\underline{G}}_{mm}(\underline{r}-\underline{r}') \cdot \underline{J}_m(\underline{r}')d\underline{r}' = \underline{\underline{G}}_{me} * \underline{J}_e + \underline{\underline{G}}_{mm} * \underline{J}_m \tag{2}$$

where $\underline{J}_e$ and $\underline{J}_m$ are the electric and magnetic current densities. The operators are written in terms of dyadic Green's function $\underline{\underline{G}}$:

$$\underline{\underline{G}}_{ee,n} = -j\omega\tilde{\mu}_n\underline{\underline{G}} \tag{3}$$

$$\underline{\underline{G}}_{mm,n} = -j\omega\tilde{\epsilon}_n\underline{\underline{G}} \tag{4}$$

$$\underline{\underline{G}}_{em,n} = -\underline{\underline{G}}_{me,n} = -\nabla \times \underline{\underline{G}} \tag{5}$$

$$\underline{\underline{G}} = \left[\frac{\nabla\,\nabla}{k_n^2} + \underline{\underline{I}}\right] \frac{\exp(-jk_n\,r)}{4\pi\,r} \tag{6}$$

where the propagation constant of the nth medium, k_n, is a function of permittivity ϵ, magnetic permeability μ, frequency by ω and conductivities σ_e, σ_m through the relations:

$$k_n = \omega\sqrt{\tilde{\mu}_n\tilde{\epsilon}_n} \tag{7}$$

$$\tilde{\epsilon}_n = \epsilon_0\epsilon_{r_n}(1 - j\frac{\sigma_e}{\omega\epsilon}) \tag{8}$$

$$\tilde{\mu}_n = \mu_0\mu_{r_n}(1 - j\frac{\sigma_m}{\omega\mu}) \tag{9}$$

According to the model symmetries, in cylindrical coordinates $(\hat{\rho}, \hat{\phi}, \hat{z})$, the dyadic Green's function and its rotor develop into:

$$\underline{\underline{G}}(\underline{r}) = -\frac{j}{4}\left[\frac{1}{k_t\rho}\,H_1^2(k_t\rho)\,\hat{\rho}\hat{\rho} + \left(H_0^2(k_t\rho) - \frac{1}{k_t\rho}\,H_1^2(k_t\rho)\right)\hat{\phi}\hat{\phi} + H_0^2(k_t\rho)\,\hat{z}\hat{z}\right] \tag{10}$$

$$\nabla \times \underline{\underline{G}}(\underline{r}) = -\frac{j}{4}\,k_t\,H_1^2(\rho k_t)\,(\hat{\phi}\hat{z} - \hat{z}\hat{\phi}) \tag{11}$$

where $H_0^2(k_t\rho)$ and $H_1^2(k_t\rho)$ represent, respectively, the Hankel functions of the first and second kind. In the introduced model the electromagnetic fields are independent of z. As a consequence, the propagation constant k is purely trasversal: $k = k_t$, $k_z = 0$.

Even if the problem is not homogeneous, the geometry can be easely separated into N homogeneous subdomains. Field continuity properties at the interface between two consecutive subdomains propagate the solution from one subdomain to the adjacent one. Referring to Fig.2.a, the boundary conditions on the separation surface S between media $(n-1)$ and (n), require the identity of the tangential fields on S by the relation:

$$\underline{E}_n \times \hat{\nu} = \underline{E}_{n-1} \times \hat{\nu} \tag{12}$$

$$\underline{H}_n \times \hat{\nu} = \underline{H}_{n-1} \times \hat{\nu} \tag{13}$$

where $\hat{\nu}$ is the normal to the discontinuity. If surface S is a closed one, by the Huygens's principle it is possible to introduce on the outer (inner) surface electric and magnetic current densities that allow to replace the inner (outer) medium with a generic one. The equivalent current densities are given by

$$\underline{J}_{m,(n-1)} = \hat{\nu} \times \underline{E}_n \, \delta(\underline{r} - \underline{r}_S) \qquad \underline{J}_{m,(n)} = \hat{\nu} \times \underline{E}_{n-1} \, \delta(\underline{r} - \underline{r}_S) \tag{14}$$

$$\underline{J}_{e,(n-1)} = \underline{H}_n \times \hat{\nu} \, \delta(\underline{r} - \underline{r}_S) \qquad \underline{J}_{e,(n)} = \underline{H}_{n-1} \times \hat{\nu} \, \delta(\underline{r} - \underline{r}_S) \tag{15}$$

and the boundary conditions impose that $\underline{J}_{m,(n)} = \underline{J}_{m,(n-1)}$ and $\underline{J}_{e,(n)} = \underline{J}_{e,(n-1)}$. The general problem contains a huge number of unknowns. Nevertheless, as one can see in Fig.2.b the generic medium (n) borders only media $(n-1)$ and $(n+1)$, allowing a fast recursive solution. Therefore, by (1) and (2), the electric and magnetic fields in medium (n) can be represented as functions of the electric and magnetic current densities on the discontinuity surfaces:

$$\begin{aligned} \underline{E}_n &= \underline{\underline{G}}_{ee,n} \underset{\cdot}{*} \underline{J}_{e,(n-1)n} + \underline{\underline{G}}_{em,n} \underset{\cdot}{*} \underline{J}_{m,(n-1)n} + \underline{\underline{G}}_{ee,n} \underset{\cdot}{*} \underline{J}_{e,n(n+1)} + \underline{\underline{G}}_{em,n} \underset{\cdot}{*} \underline{J}_{m,(n(n+1)} + \\ &+ \underline{\underline{G}}_{ee,n} \underset{\cdot}{*} \underline{J}_{e,s,n} + \underline{\underline{G}}_{em,n} \underset{\cdot}{*} \underline{J}_{m,s,n} \end{aligned} \tag{16}$$

$$\begin{aligned} \underline{H}_n &= \underline{\underline{G}}_{me,n} \underset{\cdot}{*} \underline{J}_{e,(n-1)n} + \underline{\underline{G}}_{mm,n} \underset{\cdot}{*} \underline{J}_{m,(n-1)n} + \underline{\underline{G}}_{me,n} \underset{\cdot}{*} \underline{J}_{e,n(n+1)} + \underline{\underline{G}}_{mm,n} \underset{\cdot}{*} \underline{J}_{m,n(n+1)} + \\ &+ \underline{\underline{G}}_{me,n} \underset{\cdot}{*} \underline{J}_{e,s,n} + \underline{\underline{G}}_{mm,n} \underset{\cdot}{*} \underline{J}_{m,s,n} \end{aligned} \tag{17}$$

where $\underline{J}_{e,pq}$ and $\underline{J}_{m,pq}$ represent the unknown current density at the interface between media p and q, $\underline{J}_{e,s,n}$, $\underline{J}_{m,s,n}$ represent the known source densities in medium (n). In our model, these sources are present only in medium (1), as elementary magnetic dipoles.

By applying the Huygens's principle (14) and (15) to the (16) and (17) it clearly appears that the electromagnetic propagation on discontinuities can be solved by a recursive method and the current densities on the nth discontinuity can be calculated as a function of the $(n-1)$th one.

The integral equation is solved using the Galerkin's Moment Method. This approach involves the use of the same set of functions, for basis expansion and testing. With reference to Fig.3, all contours are described by means of linear segments of maximum lenght $\Delta l \leq \lambda/10$. Circular contours are transformed in regular polygonal shapes with no less than $M = 16$ sides. Ground stratification discontinuities, together with the ground surface, are theorethically infinite, but truncated to a maximum lenght of 10λ to optimise the number of the unknowns. Basis and testing sets are introduced in the form of piecewise linear functions. This choice, tanks to a serial approximation of Bessel functions, allows to write matrix integrals in an analytical form.

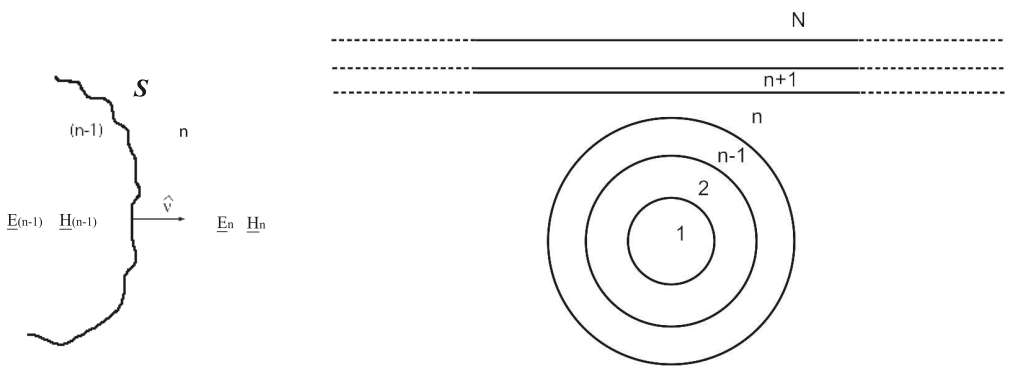

Figure 2: (a) Discontinuity between media $(n-1)$ and (n). (b) Media separation in the trasversal section.

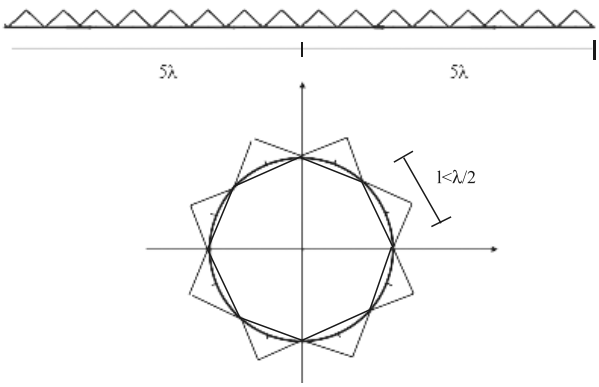

Figure 3: Piecewise linear subdomain functions on electromagnetic discontinuities

4 Conclusions

The above formulation was implemented in a computer program able to analyse a general gometry made of an arbitrary number of ground stratifications, containing pipes eith general transversal shape, independently from the electromagnetic characteristics of the soil, the tube and the fluid. Fig.4 shows results referred to a polypropylene pipe intered 3 meters under the ground Fig.4.a and a metal pipe at 1 meter depth from the surface Fig.4.b.

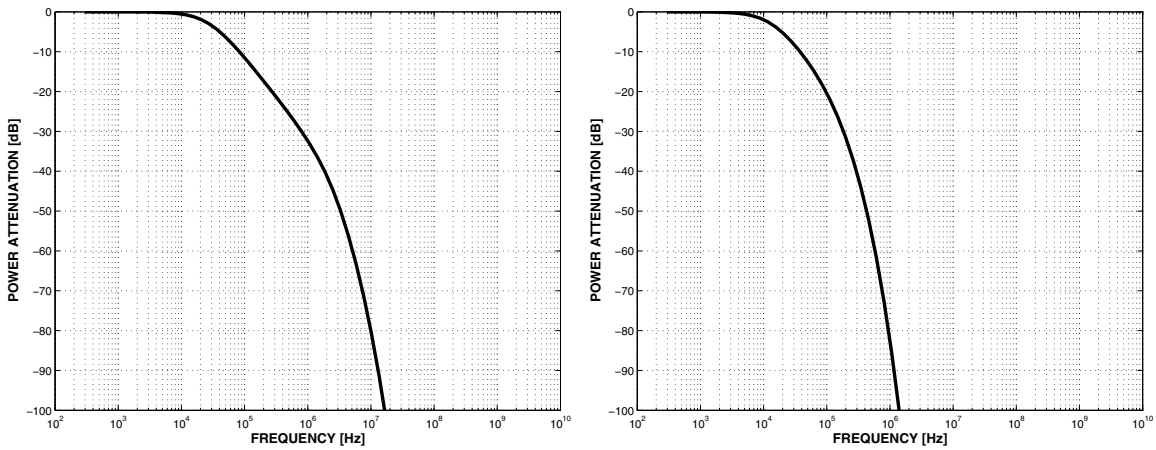

Figure 4: Examples of the analysis (a) polypropylene pipe, (b) metal pipe

5 References

1. http://www.water-technology.net/contractors/pipe _ clean/pure _ tech/pure _ tech5.html.

2. M. Lin, Y. Wu, and I. Wassell, "Wireless Sensor Network: Water Distribution Monitoring System".*IEEE Radio and Wireless Symposium*, Orlando, Florida, January 2008.

3. D. Trinchero, B. Fiorelli, R. Stefanelli, "WaterMOLE - Radioacoustic system for path recognition and leakage identification in underground water and fluid pipes". Patent Submitted, January 2008.

4. C.A. Balanis, "*Avanced engineering electromagnetics*", John Wiley & Sons, 1989, Chapter 12, pp.670-730