Design and Implementation of the Digital Simulation Impedance Standard

Li Yalu, Liu Min, Wei Qiang

Beijing Orient Institute of Measurement & Test, China Academy of Space Technology
Mail Box 9628, Beijing CHINA, 100086,liyalu61@163.com

Abstract

The digital simulation impedance (DSI), which is a new concept established on the basis of the pure digital ratio, maintains and reproduces impedance values according to the definition of the impedance in a sinusoidal steady-state circuit. In this paper, based on the concept of digital simulation impedance, a digital simulation impedance standard through using a digital method is designed and implemented, and the correctness of this new concept is proved. The proposed digital simulation impedance standard can be applied to calibrate digital bridges and LCR impedance measuring instruments, which provides a digital approach to simulation impedance traceability methods.

1. Introduction

The physical meaning of the impedance can be considered as a combination of the amplitude ratio of the voltage to the current and their phase difference. As far as a material impedance standard is concerned, this parameter is determined by the characteristics of its physical structure and medium. So it can be considered as indispensable measure to maintain and reproduce the values of standard impedance in metrology by virtue of their intrinsic constant characteristics.

However, the proportional relation of the impedance can also be acquired by some digital methods. A good example is the digital simulation impedance (DSI), in which the phasor proportion between the voltage and the current is acquired by the means of digital ratio and digital waveform synthesis, and the impedance values are maintained and reproduced by the impedance definition in a sinusoidal steady-state circuit. The new concept of DSI not only plays a practical role in calibration standards such as capacitance, inductance and resistance, but also provides a digital approach to simulation impedance traceability methods [1].

Based on the novel concept of DSI, a digital simulation impedance standard had been designed and implemented to reproduce impedance value, in which a digital method is adopted and some key technologies are utilized such as the digital waveform synthesis, amplitude ratio modulation, phase difference fitting, the transfer between voltage and current and phase-lock-based frequency tracing. Through the set voltage and current amplitude values and their phase difference of DSI, the capacitance, inductance, resistance and dissipation factor with arbitrary values by calculation can be simulated.

2. Principle of Operation

The highly precise measurement can be implemented by $Z_x=KZ_s$ where Z_x denotes the measured impedance, K denotes a scale factor and Z_s denotes the standard impedance, which is considered as the core of the bridge method principle [2].

The above proportion principle has also been applied to DSI, whose impedance values are determined by digital proportion relation between voltage and current waveforms which have been generated through digital waveform synthesis and whose amplitudes and phases can be adjusted. Since the impedance amplitude is determined by the ratio of voltage amplitude to current amplitude, the accuracy and stability of digital amplitude ratio of voltage to current are only concerned, regardless of whether the absolute amplitudes of their waveform are precise or not; while the impedance phase can also be represented as a proportion relation and the sinusoidal waveforms generated by digital waveform synthesis techniques can completely digitize the phase proportion, so that the phase relation with high stability and reproducibility can be acquired [3].

The block diagram which represents the principle of DSI is shown in Fig.1.

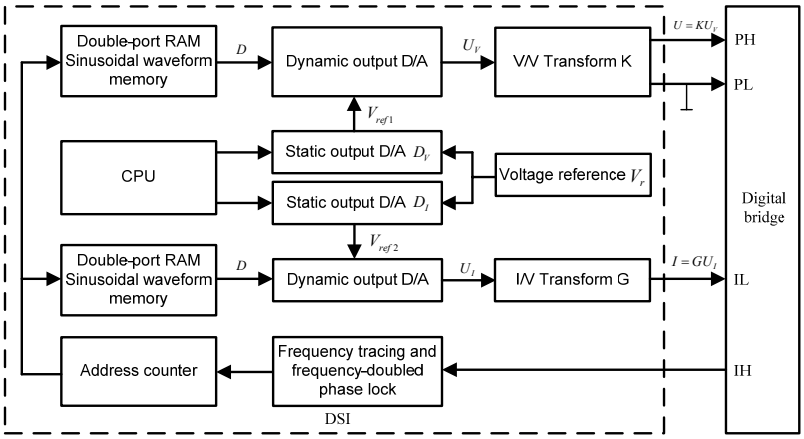

Fig.1 block diagram of digital simulation impedance

As is shown in Fig.1, the voltage waveform amplitude output in dynamic D/A is denoted as $U_V=DV_{ref1}$, and the current waveform amplitude is denoted as $U_I=DV_{ref2}$, where D denotes the sequence of the sinusoidal waveform numerical values stored in double-port RAM; Both V_{ref1} and V_{ref2} denote the reference voltage outputs in static D/A which can be written as $V_{ref1}=D_VV_r$ and $V_{ref2}=D_IV_r$, where D_V and D_I are digital inputs of static D/A; $U=KU_V$ can be implemented by the V/V transform; The V/I transform converts voltage waveform output to current waveform output, which can be written as $I=GU_I$. Therefore, we get:

$$Z=\frac{U}{I}=\frac{KU_V}{GU_I}=\frac{KDV_{ref1}}{GDV_{ref2}}=\frac{KDD_VV_r}{GDD_IV_r}=\frac{KD_V}{GD_I} \tag{1}$$

From Equation (1), the DSI is determined by the voltage-dividing scale K, current-dividing scale G and digital ratio D_V/D_I. Since both D_V and D_I are numerical values, the result of D_V/D_I is absolutely stable in theory. While the V/V and V/I transform circuits are composed of resistance networks whose change will result in the variation of voltage-dividing scale K and current-shunt scale G, so it can be considered as the main reason for affecting the stability of DSI. But D_V/D_I can be fine adjusted and systematic errors generated by K and G can be corrected when a digital method is employed, which makes DSI different from material impedance.

3. Implementation

According to the principle mentioned above, the operation process of a digital simulation impedance standard had been designed as follows:

First of all, the impedance amplitude (the waveform amplitude ratio of voltage to current) can be calculated and the sinusoidal waveform phase difference between voltage and current can be determined according to impedance style and value, as shown in Tab.1. Secondly, the constant amplitude sinusoidal waveforms with initial phase difference are stored in two double-port RAM waveform memories. Through a four quadrant multiplication-style D/A converter, the dynamic voltage output is equal to the numerical value D multiplied by reference voltage V_{ref} ($V_{out}=D\times V_{ref}$). So the amplitude ratio of the two sinusoidal waveform outputs is determined by the ratio of two reference voltages, while the two reference voltages can be acquired by the static output of two D/A converters. Finally, the voltage channel is sent to the voltage-input port of a digital bridge through a voltage-divider and the current channel is sent to the current-input port of a digital bridge through the V-I transform. Then the impedance values can be measured by the digital bridge according to the voltage and current input.

Tab.1 Amplitude and phase angle for different impedance parameters

Simulation impedance parameter	Impedance amplitude	Impedance phase-angle θ (phase difference between voltage and current)
Capacitance C	$\lvert Z \rvert = \frac{1}{2\pi fC}$	–90°
Inductance L	$\lvert Z \rvert = 2\pi fL$	90°
Resistance R	$\lvert Z \rvert = R$	0°
Dissipation factor D	$\lvert Z \rvert = 1$	90°-arctanD

4. Testing and Calibration

Based on the hardware design and software implementation, the proposed digital simulation impedance standard can substitute for the material impedance standard such as the AC resistance box, capacitance box and inductance box so as to verify or calibrate digital bridges and LCR impedance measuring instruments whose voltage and current are measured separately.

Since the digital simulation impedance standard employs digital methods to simulate impedance with different types and values, its calibration and traceability methods differ from the material impedance standard which utilizes actual values to achieve traceability. For instance, when the digital bridge by the material impedance standard is verified, the actual value of the impedance is considered as the standard value and the difference between the indication value of the digital bridge and the actual value is considered as its indication error [4] [5] [6][7]; While the digital simulation impedance standard can correct itself by its correcting program to acquire the nominal value as its output impedance. For instance, when the digital bridge by the digital simulation impedance standard is verified, its nominal value can be considered as the standard value and the difference between the indication value of the digital bridge and the nominal value is considered as its indication error.

A substitution method to calibrate the digital simulation impedance standard is employed, in which the digital bridge is a substitute and the material standard capacitor, inductor and AC resistor are the traceability standards. The detailed line diagram of the substitution method is shown in Fig.2.

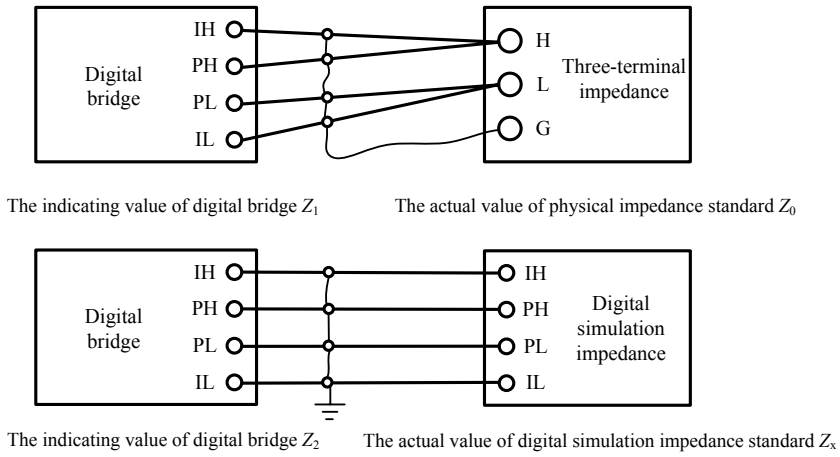

Fig.2 Measurement procedure of the substitution method

As is shown in Fig.2, according to the substitution method principle, the actual value of the digital simulation impedance can be written as:

$$Z_x = Z_0 + (Z_2 - Z_1) \tag{2}$$

where:
Z_x---- the actual value of the digital simulation impedance standard;
Z_0---- the actual value of the material impedance standard;
Z_1---- the reading of material impedance standard measured by digital bridge;
Z_2---- the reading of digital simulation impedance standard measured by digital bridge.

According to the above calibration, the following general parametric specifications of digital simulation impedance standard can be acquired:

1) Resistance
Range: 0.01Ω~10MΩ;
Frequency range: 100Hz~1MHz;
Uncertainty of measurement: 0.013 % (k=2) (1kΩ, 1 kHz);
2) Inductance
Range: 1μH~1000H;
Frequency range: 100Hz~100 kHz;
Uncertainty of measurement: 0.028 % (k=2) (1 H, 1 kHz);
3) Capacitance
Range: 1pF~1F;
Frequency range: 100Hz~1MHz;
Uncertainty of measurement: 0.010 % (k=2) (1nF, 1 kHz).

5. Conclusion

Based on the new concept of DSI and some key technologies such as the digital waveform synthesis, a digital simulation impedance standard by hardware and software design had been implemented. As a standard implement for digital bridge calibration, its frequency range is 100Hz～1MHz and the optimal uncertainty of measurement can reach 0.010% (capacitance), 0.013% (resistance) and 0.028% (inductance). In measurement and calibration laboratories, it can substitute for 0.02% material standard such as the standard capacitor, inductor and resistor, so that their volume and weight can be reduced and the efficiency of measurement and calibration increases. The DSI standard has practical significance in AC impedance calibration, automatic and digital measurement.

6. References

1. Liu Min, “A Digital Simulation Impedance Standard,” [Patent number] ZL 2005 10082928.X, 2007.

2. Muciek Andrzej, “Digital Impedance Bridge Based on a Two-phase Generator,” *IEEE Transactions on Instrumentation and Measurement*, Vol. 46, No.2, April 1997, pp. 467-470.

3. Yu S.-G., Lee Y.-S, Shin D.-J, Koo C.-S and Ryu H.-G., “Design of High-speed Direct Digital Frequency Synthesizer Including D/A Converter,” *1995 International Symposium on Communications*, 1995, pp.665-671.

4. Waltrip B.C and Oldham N.M, “Design and Performance Evaluation of the NIST Digital Impedance Bridge,” *CPEM Digest 1994*, pp. 512-513.

5. J. Bohacek, “AC QHE-based Resistance and Capacitance Calibrations,” *Proc. Inst. Elect. Eng. Sci. Meas. Technol.*, Vol.147, July 2000, pp. 190-192.

6. Grno L, “A New Concept for a Three-terminal Admittance Bridge with Self-calibration Capability,” *IEEE Transactions on Instrumentation and Measurement*, Vol.38, Issue 2, April 1989, pp.381-383.

7. L. Callegaro, “Four Terminal-pair Impedance Comparisons at High Frequency,” *IMTC 2004 Instrumentation and Measurement Technology Conference,* Como, Italy, May 2004, pp. 383-386.